Sitronix

ST7732

262K Color Single-Chip TFT Controller/Driver

1. Introduction

The ST7732 is a single-chip controller/driver for 262K-color, graphic type TFT-LCD. It consists of 396 source line and 162 gate line driving circuits. This chip is capable of connecting directly to an external microprocessor, and accepts Serial Peripheral Interface (SPI), 8-bits/9-bits/16-bits/18-bits parallel interface. Display data can be stored in the on-chip display data RAM of 132 x 162 x 18 bits. It can perform display data RAM read/write operation with no external operation clock to minimize power consumption. In addition, because of the integrated power supply circuits necessary to drive liquid crystal, it is possible to make a display system with fewer components.

2. Features

- Single chip TFT-LCD controller/driver with display data RAM
- Display resolution: 132 (H) x RGB x 162 (V)
- Display data RAM (frame memory): 132 x 162 x 18-bits = 384,912 bits
- Output:
  - 396 ch source outputs (132RGB)
  - 162 ch gate outputs
  - Common electrode output
- Display mode (color mode)
  - Full color mode (idle mode off): 262K-colors
  - Reduce color mode (idle mode on): 8-colors (1-bit for individual R, G, B color depth)
- Display resolution option
  - 128 x 160 display with 128 x 18-bits x 160 display RAM
  - 120 x 160 display with 120 x 18-bits x 160 display RAM
  - 132 x 162 display with 132 x 18-bits x 162 display RAM
- Supported LC type option
  - Transflective (TR) LC type (When LCM1,LCM0 = “00”)
  - Transmissive (TM) LC type (When LCM1,LCM0 = “01”)
  - Low voltage (LV) LC type (When LCM1,LCM0 = “10”)
  - MVA LC type (When LCM1, LCM0 = “11”)
- Supported data format on display host interface
  - 12-bits/pixel: RGB= (444) using the 384k-bits frame memory and LUT
  - 16-bits/pixel: RGB= (565) using the 384k-bits frame memory and LUT
  - 18-bits/pixel: RGB= (666) using the 384k-bits frame memory
- Supported MCU Interface
  - 3-line serial interface
  - 4-line serial interface
  - 8-bits, 9-bits, 16-bits, 18-bits interface with 8080-series MCU
  - 8-bits, 9-bits, 16-bits, 18-bits interface with 6800-series MCU
  - 8-bits, 16-bits, 18-bits RGB interface with graphic controller
- Display features
  - Area scrolling
  - Partial display mode
  - Software programmable color depth mode
- Build-in circuit
  - DC/DC converter
  - Adjustable VCOM generation
  - Non-volatile (NV) memory to store initial register setting
  - Oscillator for display clock generation
  - Timing controller
  - supporting transflective, transmissive, low voltage, MVA type LC
  - Factory default value (module ID, module version, etc) are stored in NV memory
  - Line inversion, frame inversion
- NV Memory
  - 7-bits for ID2
  - 8-bits for ID3
  - 7-bits for VCOM adjustment

Sitronix Technology Corp. reserves the right to change the contents in this document without prior notice.

- Supply voltage range
  - Analog supply voltage range for VDD to AGND: 2.5V to 3.3V
  - I/O supply voltage range for VDDI to DGND: 1.6V to 3.3V
- Output voltage level
  - Source output voltage range (GVDD to AGND): 3.0V to 5.0V
  - Power supply range for driver circuit (AVDD to AGND): 4.55V to 6.0V
  - Output range of HIGH level of VCOM (VCOMH to AGND): 2.5V to 5.0V
  - Output range of LOW level of VCOM (VCOML to AGND): -2.5V to 0.0V
  - Output range of HIGH level of gate driver (VGH to AGND): +9.4V to 16.2V
  - Output range of LOW level of gate driver (VGL to AGND): -13.5V to –7.0V
- Lower power consumption, suitable for battery operated systems
  - CMOS compatible inputs
  - Optimized layout for COG assembly
  - Operate temperature range: -30℃ to +70℃

3. Pad arrangement

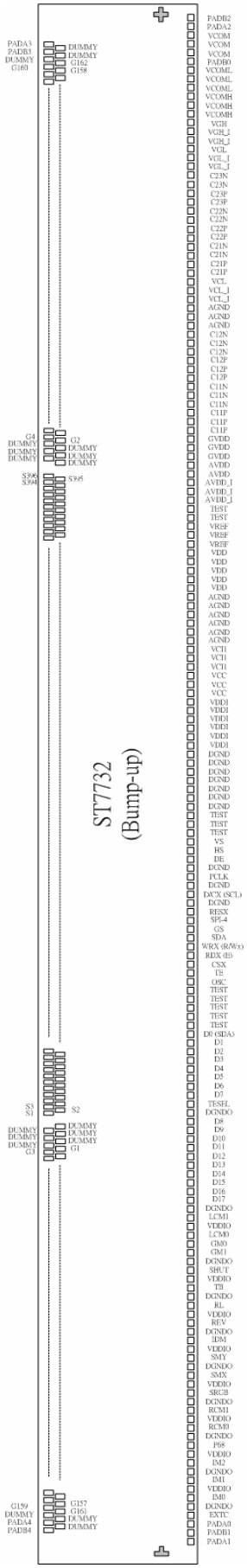

View point: bump view
Chip size (um): 13500 x 700
PAD coordinate: pad center
Coordinate origin: chip center
Chip thickness (um): 300±15
Bump height (um): 15±3
Bump hardness (HV): 75±25

Pad arrangement (Unit: um):
Output: pad No. 1 ~ 585 = 21 x 96

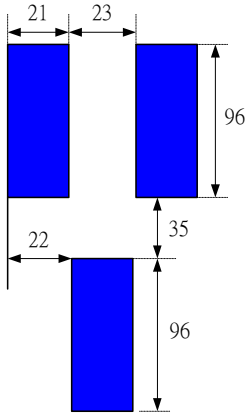

Input: pad No. 586 ~ 760 = 55 x 96

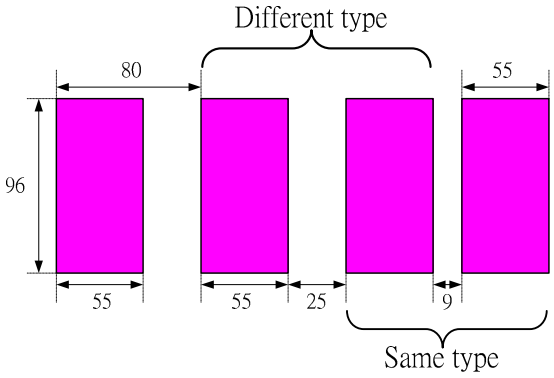

Alignment mark (unit: um):

(-6627.5, -195.5)

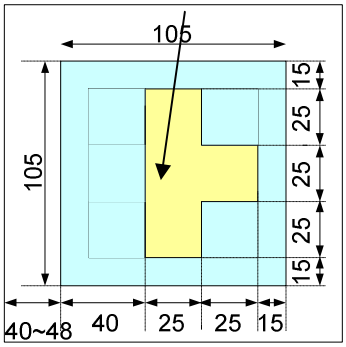

Alignment mark L ("T" type)

(6627.5, -195.5)

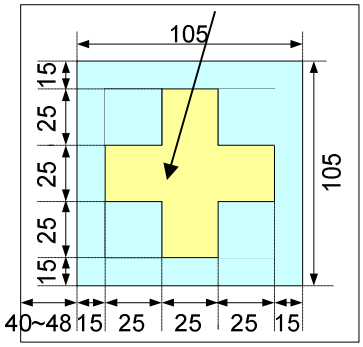

Alignment mark R ("+" type)

4. Pad Center Coordinates

PAD No.	PIN Name	X	Y	PAD No.	PIN Name	X	Y
1	PADA3	6424	239	41	G92	5544	239
2	DUMMY	6402	108	42	G90	5522	108
3	PADB3	6380	239	43	G88	5500	239
4	DUMMY	6358	108	44	G86	5478	108
5	DUMMY	6336	239	45	G84	5456	239
6	G162	6314	108	46	G82	5434	108
7	G160	6292	239	47	G80	5412	239
8	G158	6270	108	48	G78	5390	108
9	G156	6248	239	49	G76	5368	239
10	G154	6226	108	50	G74	5346	108
11	G152	6204	239	51	G72	5324	239
12	G150	6182	108	52	G70	5302	108
13	G148	6160	239	53	G68	5280	239
14	G146	6138	108	54	G66	5258	108
15	G144	6116	239	55	G64	5236	239
16	G142	6094	108	56	G62	5214	108
17	G140	6072	239	57	G60	5192	239
18	G138	6050	108	58	G58	5170	108
19	G136	6028	239	59	G56	5148	239
20	G134	6006	108	60	G54	5126	108
21	G132	5984	239	61	G52	5104	239
22	G130	5962	108	62	G50	5082	108
23	G128	5940	239	63	G48	5060	239
24	G126	5918	108	64	G46	5038	108
25	G124	5896	239	65	G44	5016	239
26	G122	5874	108	66	G42	4994	108
27	G120	5852	239	67	G40	4972	239
28	G118	5830	108	68	G38	4950	108
29	G116	5808	239	69	G36	4928	239
30	G114	5786	108	70	G34	4906	108
31	G112	5764	239	71	G32	4884	239
32	G110	5742	108	72	G30	4862	108
33	G108	5720	239	73	G28	4840	239
34	G106	5698	108	74	G26	4818	108
35	G104	5676	239	75	G24	4796	239
36	G102	5654	108	76	G22	4774	108
37	G100	5632	239	77	G20	4752	239
38	G98	5610	108	78	G18	4730	108
39	G96	5588	239	79	G16	4708	239
40	G94	5566	108	80	G14	4686	108

PAD No.	PIN Name	X	Y
81	G12	4664	239
82	G10	4642	108
83	G8	4620	239
84	G6	4598	108
85	G4	4576	239
86	G2	4554	108
87	DUMMY	4532	239
88	DUMMY	4510	108
89	DUMMY	4488	239
90	DUMMY	4466	108
91	DUMMY	4444	239
92	DUMMY	4422	108
93	S396	4400	239
94	S395	4378	108
95	S394	4356	239
96	S393	4334	108
97	S392	4312	239
98	S391	4290	108
99	S390	4268	239
100	S389	4246	108
101	S388	4224	239
102	S387	4202	108
103	S386	4180	239
104	S385	4158	108
105	S384	4136	239
106	S383	4114	108
107	S382	4092	239
108	S381	4070	108
109	S380	4048	239
110	S379	4026	108
111	S378	4004	239
112	S377	3982	108
113	S376	3960	239
114	S375	3938	108
115	S374	3916	239
116	S373	3894	108
117	S372	3872	239
118	S371	3850	108
119	S370	3828	239
120	S369	3806	108

PAD No.	PIN Name	X	Y
121	S368	3784	239
122	S367	3762	108
123	S366	3740	239
124	S365	3718	108
125	S364	3696	239
126	S363	3674	108
127	S362	3652	239
128	S361	3630	108
129	S360	3608	239
130	S359	3586	108
131	S358	3564	239
132	S357	3542	108
133	S356	3520	239
134	S355	3498	108
135	S354	3476	239
136	S353	3454	108
137	S352	3432	239
138	S351	3410	108
139	S350	3388	239
140	S349	3366	108
141	S348	3344	239
142	S347	3322	108
143	S346	3300	239
144	S345	3278	108
145	S344	3256	239
146	S343	3234	108
147	S342	3212	239
148	S341	3190	108
149	S340	3168	239
150	S339	3146	108
151	S338	3124	239
152	S337	3102	108
153	S336	3080	239
154	S335	3058	108
155	S334	3036	239
156	S333	3014	108
157	S332	2992	239
158	S331	2970	108
159	S330	2948	239
160	S329	2926	108

PAD No.	PIN Name	X	Y
161	S328	2904	239
162	S327	2882	108
163	S326	2860	239
164	S325	2838	108
165	S324	2816	239
166	S323	2794	108
167	S322	2772	239
168	S321	2750	108
169	S320	2728	239
170	S319	2706	108
171	S318	2684	239
172	S317	2662	108
173	S316	2640	239
174	S315	2618	108
175	S314	2596	239
176	S313	2574	108
177	S312	2552	239
178	S311	2530	108
179	S310	2508	239
180	S309	2486	108
181	S308	2464	239
182	S307	2442	108
183	S306	2420	239
184	S305	2398	108
185	S304	2376	239
186	S303	2354	108
187	S302	2332	239
188	S301	2310	108
189	S300	2288	239
190	S299	2266	108
191	S298	2244	239
192	S297	2222	108
193	S296	2200	239
194	S295	2178	108
195	S294	2156	239
196	S293	2134	108
197	S292	2112	239
198	S291	2090	108
199	S290	2068	239
200	S289	2046	108

PAD No.	PIN Name	X	Y
201	S288	2024	239
202	S287	2002	108
203	S286	1980	239
204	S285	1958	108
205	S284	1936	239
206	S283	1914	108
207	S282	1892	239
208	S281	1870	108
209	S280	1848	239
210	S279	1826	108
211	S278	1804	239
212	S277	1782	108
213	S276	1760	239
214	S275	1738	108
215	S274	1716	239
216	S273	1694	108
217	S272	1672	239
218	S271	1650	108
219	S270	1628	239
220	S269	1606	108
221	S268	1584	239
222	S267	1562	108
223	S266	1540	239
224	S265	1518	108
225	S264	1496	239
226	S263	1474	108
227	S262	1452	239
228	S261	1430	108
229	S260	1408	239
230	S259	1386	108
231	S258	1364	239
232	S257	1342	108
233	S256	1320	239
234	S255	1298	108
235	S254	1276	239
236	S253	1254	108
237	S252	1232	239
238	S251	1210	108
239	S250	1188	239
240	S249	1166	108

PAD No.	PIN Name	X	Y
241	S248	1144	239
242	S247	1122	108
243	S246	1100	239
244	S245	1078	108
245	S244	1056	239
246	S243	1034	108
247	S242	1012	239
248	S241	990	108
249	S240	968	239
250	S239	946	108
251	S238	924	239
252	S237	902	108
253	S236	880	239
254	S235	858	108
255	S234	836	239
256	S233	814	108
257	S232	792	239
258	S231	770	108
259	S230	748	239
260	S229	726	108
261	S228	704	239
262	S227	682	108
263	S226	660	239
264	S225	638	108
265	S224	616	239
266	S223	594	108
267	S222	572	239
268	S221	550	108
269	S220	528	239
270	S219	506	108
271	S218	484	239
272	S217	462	108
273	S216	440	239
274	S215	418	108
275	S214	396	239
276	S213	374	108
277	S212	352	239
278	S211	330	108
279	S210	308	239
280	S209	286	108

PAD No.	PIN Name	X	Y
281	S208	264	239
282	S207	242	108
283	S206	220	239
284	S205	198	108
285	S204	176	239
286	S203	154	108
287	S202	132	239
288	S201	110	108
289	S200	88	239
290	S199	66	108
291	DUMMY	44	239
292	DUMMY	22	108
293	DUMMY	0	239
294	DUMMY	-22	108
295	DUMMY	-44	239
296	S198	-66	108
297	S197	-88	239
298	S196	-110	108
299	S195	-132	239
300	S194	-154	108
301	S193	-176	239
302	S192	-198	108
303	S191	-220	239
304	S190	-242	108
305	S189	-264	239
306	S188	-286	108
307	S187	-308	239
308	S186	-330	108
309	S185	-352	239
310	S184	-374	108
311	S183	-396	239
312	S182	-418	108
313	S181	-440	239
314	S180	-462	108
315	S179	-484	239
316	S178	-506	108
317	S177	-528	239
318	S176	-550	108
319	S175	-572	239
320	S174	-594	108

PAD No.	PIN Name	X	Y
321	S173	-616	239
322	S172	-638	108
323	S171	-660	239
324	S170	-682	108
325	S169	-704	239
326	S168	-726	108
327	S167	-748	239
328	S166	-770	108
329	S165	-792	239
330	S164	-814	108
331	S163	-836	239
332	S162	-858	108
333	S161	-880	239
334	S160	-902	108
335	S159	-924	239
336	S158	-946	108
337	S157	-968	239
338	S156	-990	108
339	S155	-1012	239
340	S154	-1034	108
341	S153	-1056	239
342	S152	-1078	108
343	S151	-1100	239
344	S150	-1122	108
345	S149	-1144	239
346	S148	-1166	108
347	S147	-1188	239
348	S146	-1210	108
349	S145	-1232	239
350	S144	-1254	108
351	S143	-1276	239
352	S142	-1298	108
353	S141	-1320	239
354	S140	-1342	108
355	S139	-1364	239
356	S138	-1386	108
357	S137	-1408	239
358	S136	-1430	108
359	S135	-1452	239
360	S134	-1474	108

PAD No.	PIN Name	X	Y
361	S133	-1496	239
362	S132	-1518	108
363	S131	-1540	239
364	S130	-1562	108
365	S129	-1584	239
366	S128	-1606	108
367	S127	-1628	239
368	S126	-1650	108
369	S125	-1672	239
370	S124	-1694	108
371	S123	-1716	239
372	S122	-1738	108
373	S121	-1760	239
374	S120	-1782	108
375	S119	-1804	239
376	S118	-1826	108
377	S117	-1848	239
378	S116	-1870	108
379	S115	-1892	239
380	S114	-1914	108
381	S113	-1936	239
382	S112	-1958	108
383	S111	-1980	239
384	S110	-2002	108
385	S109	-2024	239
386	S108	-2046	108
387	S107	-2068	239
388	S106	-2090	108
389	S105	-2112	239
390	S104	-2134	108
391	S103	-2156	239
392	S102	-2178	108
393	S101	-2200	239
394	S100	-2222	108
395	S99	-2244	239
396	S98	-2266	108
397	S97	-2288	239
398	S96	-2310	108
399	S95	-2332	239
400	S94	-2354	108

PAD No.	PIN Name	X	Y
401	S93	-2376	239
402	S92	-2398	108
403	S91	-2420	239
404	S90	-2442	108
405	S89	-2464	239
406	S88	-2486	108
407	S87	-2508	239
408	S86	-2530	108
409	S85	-2552	239
410	S84	-2574	108
411	S83	-2596	239
412	S82	-2618	108
413	S81	-2640	239
414	S80	-2662	108
415	S79	-2684	239
416	S78	-2706	108
417	S77	-2728	239
418	S76	-2750	108
419	S75	-2772	239
420	S74	-2794	108
421	S73	-2816	239
422	S72	-2838	108
423	S71	-2860	239
424	S70	-2882	108
425	S69	-2904	239
426	S68	-2926	108
427	S67	-2948	239
428	S66	-2970	108
429	S65	-2992	239
430	S64	-3014	108
431	S63	-3036	239
432	S62	-3058	108
433	S61	-3080	239
434	S60	-3102	108
435	S59	-3124	239
436	S58	-3146	108
437	S57	-3168	239
438	S56	-3190	108
439	S55	-3212	239
440	S54	-3234	108

PAD No.	PIN Name	X	Y
441	S53	-3256	239
442	S52	-3278	108
443	S51	-3300	239
444	S50	-3322	108
445	S49	-3344	239
446	S48	-3366	108
447	S47	-3388	239
448	S46	-3410	108
449	S45	-3432	239
450	S44	-3454	108
451	S43	-3476	239
452	S42	-3498	108
453	S41	-3520	239
454	S40	-3542	108
455	S39	-3564	239
456	S38	-3586	108
457	S37	-3608	239
458	S36	-3630	108
459	S35	-3652	239
460	S34	-3674	108
461	S33	-3696	239
462	S32	-3718	108
463	S31	-3740	239
464	S30	-3762	108
465	S29	-3784	239
466	S28	-3806	108
467	S27	-3828	239
468	S26	-3850	108
469	S25	-3872	239
470	S24	-3894	108
471	S23	-3916	239
472	S22	-3938	108
473	S21	-3960	239
474	S20	-3982	108
475	S19	-4004	239
476	S18	-4026	108
477	S17	-4048	239
478	S16	-4070	108
479	S15	-4092	239
480	S14	-4114	108

PAD No.	PIN Name	X	Y
481	S13	-4136	239
482	S12	-4158	108
483	S11	-4180	239
484	S10	-4202	108
485	S9	-4224	239
486	S8	-4246	108
487	S7	-4268	239
488	S6	-4290	108
489	S5	-4312	239
490	S4	-4334	108
491	S3	-4356	239
492	S2	-4378	108
493	S1	-4400	239
494	DUMMY	-4422	108
495	DUMMY	-4444	239
496	DUMMY	-4466	108
497	DUMMY	-4488	239
498	DUMMY	-4510	108
499	DUMMY	-4532	239
500	G1	-4554	108
501	G3	-4576	239
502	G5	-4598	108
503	G7	-4620	239
504	G9	-4642	108
505	G11	-4664	239
506	G13	-4686	108
507	G15	-4708	239
508	G17	-4730	108
509	G19	-4752	239
510	G21	-4774	108
511	G23	-4796	239
512	G25	-4818	108
513	G27	-4840	239
514	G29	-4862	108
515	G31	-4884	239
516	G33	-4906	108
517	G35	-4928	239
518	G37	-4950	108
519	G39	-4972	239
520	G41	-4994	108

PAD No.	PIN Name	X	Y
521	G43	-5016	239
522	G45	-5038	108
523	G47	-5060	239
524	G49	-5082	108
525	G51	-5104	239
526	G53	-5126	108
527	G55	-5148	239
528	G57	-5170	108
529	G59	-5192	239
530	G61	-5214	108
531	G63	-5236	239
532	G65	-5258	108
533	G67	-5280	239
534	G69	-5302	108
535	G71	-5324	239
536	G73	-5346	108
537	G75	-5368	239
538	G77	-5390	108
539	G79	-5412	239
540	G81	-5434	108
541	G83	-5456	239
542	G85	-5478	108
543	G87	-5500	239
544	G89	-5522	108
545	G91	-5544	239
546	G93	-5566	108
547	G95	-5588	239
548	G97	-5610	108
549	G99	-5632	239
550	G101	-5654	108
551	G103	-5676	239
552	G105	-5698	108
553	G107	-5720	239
554	G109	-5742	108
555	G111	-5764	239
556	G113	-5786	108
557	G115	-5808	239
558	G117	-5830	108
559	G119	-5852	239
560	G121	-5874	108

PAD No.	PIN Name	X	Y
561	G123	-5896	239
562	G125	-5918	108
563	G127	-5940	239
564	G129	-5962	108
565	G131	-5984	239
566	G133	-6006	108
567	G135	-6028	239
568	G137	-6050	108
569	G139	-6072	239
570	G141	-6094	108
571	G143	-6116	239
572	G145	-6138	108
573	G147	-6160	239
574	G149	-6182	108
575	G151	-6204	239
576	G153	-6226	108
577	G155	-6248	239
578	G157	-6270	108
579	G159	-6292	239
580	G161	-6314	108
581	DUMMY	-6336	239
582	DUMMY	-6358	108
583	PADA4	-6380	239
584	DUMMY	-6402	108
585	PADB4	-6424	239
586	PADA1	-6464	-239
587	PADB1	-6400	-239
588	PADA0	-6320	-239
589	EXTC	-6240	-239
590	DGNDO	-6160	-239
591	IM[0]	-6080	-239
592	VDDIO	-6000	-239
593	IM[1]	-5920	-239
594	DGNDO	-5840	-239
595	IM[2]	-5760	-239
596	VDDIO	-5680	-239
597	P68	-5600	-239
598	DGNDO	-5520	-239
599	RCM[0]	-5440	-239
600	VDDIO	-5360	-239

PAD No.	PIN Name	X	Y
601	RCM[1]	-5280	-239
602	DGNDO	-5200	-239
603	SRGB	-5120	-239
604	VDDIO	-5040	-239
605	SMX	-4960	-239
606	DGNDO	-4880	-239
607	SMY	-4800	-239
608	VDDIO	-4720	-239
609	IDM	-4640	-239
610	DGNDO	-4560	-239
611	REV	-4480	-239
612	VDDIO	-4400	-239
613	RL	-4320	-239
614	DGNDO	-4240	-239
615	TB	-4160	-239
616	VDDIO	-4080	-239
617	SHUT	-4000	-239
618	DGNDO	-3920	-239
619	GM[1]	-3840	-239
620	GM[0]	-3760	-239
621	LCM[0]	-3680	-239
622	VDDIO	-3600	-239
623	LCM[1]	-3520	-239
624	DGNDO	-3440	-239
625	D[17]	-3360	-239
626	D[16]	-3280	-239
627	D[15]	-3200	-239
628	D[14]	-3120	-239
629	D[13]	-3040	-239
630	D[12]	-2960	-239
631	D[11]	-2880	-239
632	D[10]	-2800	-239
633	D[9]	-2720	-239
634	D[8]	-2640	-239
635	DGNDO	-2560	-239
636	TESEL	-2480	-239
637	D[7]	-2400	-239
638	D[6]	-2320	-239
639	D[5]	-2240	-239
640	D[4]	-2160	-239

PAD No.	PIN Name	X	Y
641	D[3]	-2080	-239
642	D[2]	-2000	-239
643	D[1]	-1920	-239
644	D[0] (SDA)	-1840	-239
645	TPO[8]	-1760	-239
646	TPO[7]	-1680	-239
647	TPO[6]	-1600	-239
648	TPO[5]	-1520	-239
649	TPO[4]	-1440	-239
650	OSC	-1360	-239
651	TE	-1280	-239
652	CSX	-1200	-239
653	RDX (E)	-1120	-239
654	WRX (D/CX)	-1040	-239
655	SDA	-960	-239
656	GS	-880	-239
657	4WSPI	-800	-239
658	RESX	-720	-239
659	DGND	-640	-239
660	D/CX(SCL)	-560	-239
661	DGND	-480	-239
662	PCLK	-400	-239
663	DGND	-320	-239
664	DE	-240	-239
665	HS	-160	-239
666	VS	-80	-239
667	TPO[3]	0	-239
668	TPO[2]	80	-239
669	TPO[1]	160	-239
670	DGND	240	-239
671	DGND	304	-239
672	DGND	368	-239
673	DGND	432	-239
674	DGND	496	-239
675	DGND	560	-239
676	DGND	624	-239
677	VDDI	704	-239
678	VDDI	768	-239
679	VDDI	832	-239
680	VDDI	896	-239

PAD No.	PIN Name	X	Y
681	VDDI	960	-239
682	VDDI	1024	-239
683	VCC	1104	-239
684	VCC	1168	-239
685	VCC	1232	-239
686	VCI1	1312	-239
687	VCI1	1376	-239
688	VCI1	1440	-239
689	AGND	1520	-239
690	AGND	1584	-239
691	AGND	1648	-239
692	AGND	1712	-239
693	AGND	1776	-239
694	AGND	1840	-239
695	VDD	1920	-239
696	VDD	1984	-239
697	VDD	2048	-239
698	VDD	2112	-239
699	VDD	2176	-239
700	VREF	2256	-239
701	VREF	2320	-239
702	VREF	2384	-239
703	TPI[1]	2464	-239
704	TPI[2]	2544	-239
705	AVDD	2624	-239
706	AVDD	2688	-239
707	AVDD	2752	-239
708	AVDD_O	2816	-239
709	AVDD_O	2880	-239
710	GVDD	2960	-239
711	GVDD	3024	-239
712	GVDD	3088	-239
713	C11P	3168	-239
714	C11P	3232	-239
715	C11P	3296	-239
716	C11N	3376	-239
717	C11N	3440	-239
718	C11N	3504	-239
719	C12P	3584	-239
720	C12P	3648	-239

PAD No.	PIN Name	X	Y	PAD No.	PIN Name	X	Y
721	C12P	3712	-239				
722	C12N	3792	-239				
723	C12N	3856	-239				
724	C12N	3920	-239				
725	AGND	4000	-239				
726	AGND	4064	-239				
727	AGND	4128	-239				
728	VCL	4208	-239				
729	VCL	4272	-239				
730	VCL_O	4336	-239				
731	C21P	4416	-239				
732	C21P	4480	-239				
733	C21N	4560	-239				
734	C21N	4624	-239				
735	C22P	4704	-239				
736	C22P	4768	-239				
737	C22N	4848	-239				
738	C22N	4912	-239				
739	C23P	4992	-239				
740	C23P	5056	-239				
741	C23N	5136	-239				
742	C23N	5200	-239				
743	VGL	5280	-239				
744	VGL	5344	-239				
745	VGL	5408	-239				
746	VGH_O	5488	-239				
747	VGH	5552	-239				
748	VGH	5616	-239				
749	VCOMH	5696	-239				
750	VCOMH	5760	-239				
751	VCOMH	5824	-239				
752	VCOML	5904	-239				
753	VCOML	5968	-239				
754	VCOML	6032	-239				
755	PADB0	6112	-239				
756	VCOM	6192	-239				
757	VCOM	6256	-239				
758	VCOM	6320	-239				
759	PADA2	6400	-239				
760	PADB2	6464	-239				

5 Block diagram

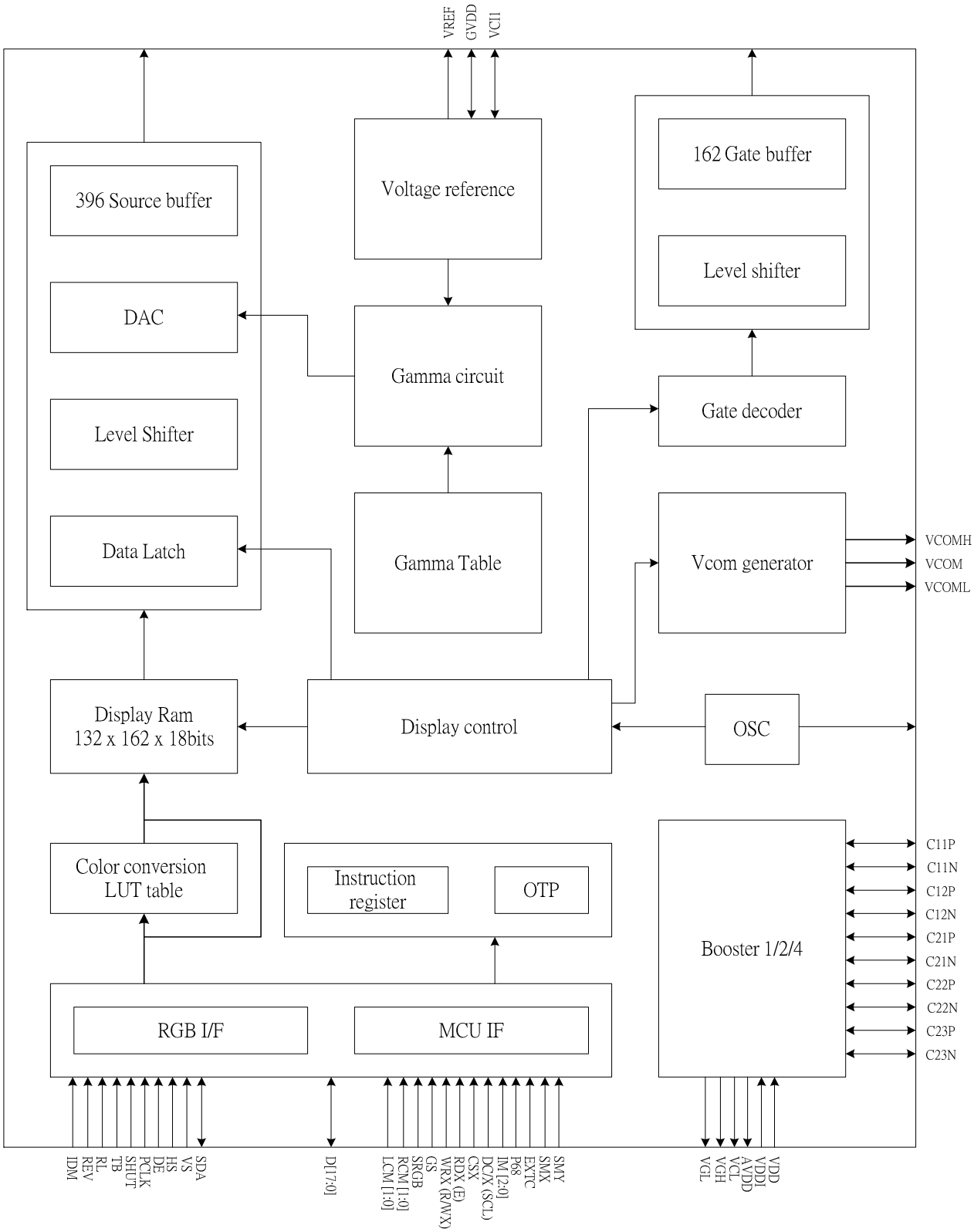

6 Pin Description

6.1 Power supply pin

Name	I/O	Description	Count	Connect pin
VDD	I	Power supply for analog, digital system and booster circuit.	5	VDD
VDDI	I	Power supply for I/O system.	6	VDDI
AGND	I	System ground for analog system and booster circuit.	9	GND
DGND	I	System ground for I/O system and digital system.	10	GND

6.2 Interface logic pin

Name	I/O	Description	Count	Connect pin
P68	I	-8080/6800 MCU interface mode select. -P68='1', select 6800 MCU parallel interface. -P68='0', select 8080 MCU parallel interface. -If not used, please connect this pin to VDDI or DGND level.	1	DGND/VDDI
IM0~IM2	I	-Selection for MCU parallel interface or serial interface. -If not used, please connect this pin to VDDI or DGND.	3	DGND/VDDI
4WSPI	I	- 4-line SPI enable. -If not used, please fix this pin to DGND.	1	DGND/VDDI
RESX	I	-This signal will reset the device and it must be applied to properly initialize the chip. -Signal is active low.	1	MCU
CSX	I	-Chip selection pin -Low enable.	1	MCU
D/CX (SCL)	I	-Display data/command selection pin in MCU interface. -D/CX='1': display data or parameter. -D/CX='0': command data. -In serial interface, this is used as SCL. -If not used, please connect this pin to VDDI or DGND.	1	MCU
RDX (E)	I	-Read enable in 8080 MCU parallel interface. -Read/write operation enable pin in 6800 MCU parallel interface. -If not used, please connect this pin to VDDI or DGND.	1	MCU
WRX (D/CX)	I	-Write enable in MCU parallel interface. -In 4-line SPI, this pin is used as D/CX (data/ command selection). -If not used, please connect this pin to VDDI or DGND.	1	MCU
SDA	I	-When RCM1, RCM0='1X' (RGB interface), this pin is used as serial input/output pin. -When RCM1, RCM0='0X' (MCU interface), this pin is not used and please connect to VDDI or DGND level. The serial input/output pin in MCU interface mode is D0.	1	MCU DGND/VDDI
OSC	O	-Monitoring pin of internal oscillator clock and is turned ON/OFF by S/W command. -When this pin is inactive (function OFF), this pin is DGND level. -If not used, please open this pin.	1	-
D[17:0]	I/O	-When RCM="1" (RGB interface), D[17:0] are used as RGB interface data bus. -When RCM="0" (MCU interface), D[17:0] are used as MCU parallel interface data bus. -D0 is the serial input/output signal in serial interface mode. -In serial interface, D[17:1] are not used and should be connected to VDDI or DGND.	18	MCU
TE	I/O	-Tearing effect output pin to synchronies MCU to frame rate, activated by S/W command. -If not used, please open this pin.	1	MCU
PCLK	I	-Pixel clock signal in RGB interface mode. -If not used, please fix this pin at VDDI or DGND.	1	RGB interface
VS	I	-Vertical sync. signal in RGB interface mode. -If not used, please fix this pin at VDDI or DGND.	1	RGB interface
HS	I	-Horizontal sync. signal in RGB interface mode. -If not used, please fix this pin at VDDI or DGND.	1	RGB interface
DE	I	-Data enable signal in RGB interface mode. -If not used, please fix this pin at VDDI or DGND.	1	RGB interface

Note1. When in parallel mode, no use data pin must be connected to "1" or "0".
Note2. When CSX="1", there is no influence to the parallel and serial interface.

6.3 Mode selection pin

Name	I/O	Description	Count	Connect pin
EXTC	I	-To use extended command set, please connect this pin to VDDI. -During normal operation, please open this pin (internal $R_{pull\text{-}down}$=2MΩ). EXTC: Enable/disable modification of extend command 0: Only use default command set 1: Use extended command set	1	VDDI/DGND
GS	I	-Gamma curve selection pin. GS: Selection of gamma curve 0: GC0=1.0, GC1=2.5, GC2=2.2, GC3=1.8 1: GC0=2.2, GC1=1.8, GC2=2.5, GC3=1.0	1	VDDI/DGND
IDM	I	-Normal mode and idle mode selection pin. IDM: Enable/disable idle mode 0: Normal display (can be changed to Idle mode by S/W) 1: Idle mode enable	1	VDDI/DGND
GM1, GM0	I	-Panel resolution selection pins. GM[1:0]: Selection of panel resolution 00: 128RGB x 160 01: 120RGB x 160 11: 132RGB x 162	2	VDDI/DGND
LCM1, LCM0	I	-Liquid crystal (LC) type selection pins. LCM[1:0]: Selection of LC type 00 (0): TR (transflective) type LC 01 (1): TM (transmissive) type LC 10 (2): LV (low voltage) type LC 11 (3): MVA (multi-domain vertical alignment) type LC	2	VDDI/DGND
RCM1, RCM0	I	-RGB or MCU interface mode selection pins. RCM[1:0]: Selection of MCU or RGB interface 00 (0): MCU Interface 01 (1): MCU Interface 10 (2): RGB Interface (1) 11 (3): RGB Interface (2)	2	VDDI/DGND
SRGB	I	-RGB arrangement selection pin for color filter design. SRGB: RGB arrangement 0: S1, S2, S3 filter order = 'R', 'G', 'B' 1: S1, S2, S3 filter order = 'B', 'G', 'R'	1	VDDI/DGND
SMX	I	-Scanning direction of source output selection pin. SMX: Scanning direction of source output GM="00": 0 S7 -> S390, 1 S390 -> S7 GM="01": 0 S7 -> S366, 1 S366 -> S7 GM="11": 0 S1 -> S396, 1 S396 -> S1	1	VDDI/DGND
SMY	I	-Scanning direction of gate output selection pin. SMY: Scanning direction of gate output GM="00": 0 G2 -> G161, 1 G161 -> G2 GM="01": 0 G2 -> G161, 1 G161 -> G2 GM="11": 0 G1 -> G162, 1 G162 -> G1	1	VDDI/DGND
REV	I	-Polarity of source output selection pin. REV, Command: Polarity of source output 0, INVON(21h): Data reverse 0, INVOFF(20h): Data not reverse 1, INVON(21h): Data not reverse 1, INVOFF(20h): Data reverse	1	VDDI/DGND
SHUT	I	-Display On/Off control pin In RGB interface. SHUT: Display On/Off 0: Display On 1: Display Off	1	VDDI/DGND
RL	I	-Scanning direction of source output selection pin in RGB interface. RL, SMX: Scanning direction of source output GM="00": 0,0 S7 -> S390; 0,1 S390 -> S7; 1,0 S390 -> S7; 1,1 S7 -> S390 GM="01": 0,0 S7 -> S366; 0,1 S366 -> S7; 1,0 S366 -> S7; 1,1 S7 -> S366 GM="11": 0,0 S1 -> S396; 0,1 S396 -> S1; 1,0 S396 -> S1; 1,1 S1 -> S396	1	VDDI/DGND

<table>
<tr><td>TB</td><td>I</td><td>-Scanning direction of gate output selection pin in RGB interface.
<table>
<tr><th>TB</th><th>SMY</th><th colspan="3">Scanning direction of gate output</th></tr>
<tr><td></td><td></td><td>GM="00"</td><td>GM="01"</td><td>GM="11"</td></tr>
<tr><td>0</td><td>0</td><td>G2 -> G161</td><td>G2 -> G161</td><td>G1 -> G162</td></tr>
<tr><td>0</td><td>1</td><td>G161 -> G2</td><td>G161 -> G2</td><td>G162 -> G1</td></tr>
<tr><td>1</td><td>0</td><td>G161 -> G2</td><td>G161 -> G2</td><td>G162 -> G1</td></tr>
<tr><td>1</td><td>1</td><td>G2 -> G161</td><td>G2 -> G161</td><td>G1 -> G162</td></tr>
</table></td><td>1</td><td>VDDI/DGND</td></tr>
<tr><td>TESEL</td><td>I/O</td><td>- Input mode: TE output number setting
<table>
<tr><th>TESEL</th><th>GM[1:0]</th><th>Number of TE output (H-sync)</th></tr>
<tr><td>-</td><td>00</td><td>160</td></tr>
<tr><td>-</td><td>01</td><td>160</td></tr>
<tr><td>0</td><td>11</td><td>162</td></tr>
<tr><td>1</td><td>11</td><td>160</td></tr>
</table>
- Output mode: It must be setting to output mode if FPC does not have or connect this pin to panel. (refer to the application note)</td><td>1</td><td>VDDI/DGND</td></tr>
</table>

6.4 Driver output pin

Name	I/O	Description	Count	Connect pin
S1 to S396	O	- Source driver output pins.	396	-
G1 to G162	O	- Gate driver output pins.	162	-
VCI1	I/O	- A reference voltage for step-up circuit 1. - Connect a capacitor for stabilization.	3	Capacitor
AVDD	I	- Power input pin for analog circuits. - In normal usage, connect it to AVDDO.	3	AVDDO
AVDDO	O	- Output of step-up circuit 1 - Connect a capacitor for stabilization.	2	Capacitor
VCL	I	- Power input pin for VCOM circuit. - In normal usage, connect it to VCLO.	2	VCLO
VCLO	O	- A power output pin of step-up circuit 4. - When VCOML is higher than AGND, VCLO=AGND. - Connect a capacitor for stabilization.	1	Capacitor
VGH	I	- Power input pin for gate driver circuit. - In normal usage, connect it to VGHO.	2	VGHO
VGHO	O	- Positive output pin of the step-up circuit 2. - Connect a capacitor for stabilization.	1	Capacitor
VGL	I	- Power input pin for gate driver circuit. - Negative output of the step-up circuit 2 is connected inside the driver. - Connect a capacitor for stabilization.	3	VGLO
VREF	O	- A reference voltage for power system. - Connect a capacitor for stabilization.	3	Capacitor
GVDD	O	- A power output of grayscale voltage generator. - Connect a capacitor for stabilization. - When internal GVDD generator is not used, connect an external power supply (AVDD-0.5V) to this pin.	3	Capacitor
VCOMH	O	- Positive voltage output of VCOM. - Connect a capacitor for stabilization.	3	Capacitor
VCOML	O	- Negative voltage output of VCOM. - Connect a capacitor for stabilization.	3	Capacitor
VCOM	O	- A power supply for the TFT-LCD common electrode.	3	Common electrode
C11P, C11N C12P, C12N	O	- Capacitor connecting pins for step-up circuit 1 (for AVDDO)	12	Step-up Capacitor
C21P, C21N C22P, C22N C23P, C23N	O	- Capacitor connecting pins for step-up circuit 2 and 4 (for VGHO, VGLO, VCLO)	12	Step-up Capacitor
VDDIO	O	-VDDI voltage output level for monitoring.	8	-
DGNDO	O	-DGND voltage output level for monitoring.	10	-
VCC	O	-Monitoring pin of internal digital reference voltage. -Connect a capacitor for stabilization.	3	Capacitor

6.5 Test ping

Name	I/O	Description	Count	Connect pin
PADA0 PADB0	I	-These test pins is for display glass break detection. -If not used, please open these pins.	2	Open
PADA1 PADB1 PADA2 PADB2 PADA3 PADB3 PADA4 PADB4	I	-These test pins is for chip attachment detection. -If not used, please open these pins.	8	Open
TPI[2]~[1]	I	-Please open these pins.	2	Open
TPO[8]~[1]	O	-Please open these pins.	8	Open
Dummy	-	-These pins are dummy (have no function inside). -Can allow signal traces pass through these pads on TFT glass.	23	Open

7. Driver electrical characteristics

7.1 Absolute operation range

Item	Symbol	Rating	Unit
Supply voltage	VDD	- 0.3 ~ +4.6	V
Supply voltage (Logic)	VDDI	- 0.3 ~ +4.6	V
Supply voltage (Digital)	VCC	-0.3 ~ +4.6	V
Driver supply voltage	VGH-VGL	-0.3 ~ +30.0	V
Logic input voltage range	V_{IN}	0.3 ~ VDDI + 0.3	V
Logic output voltage range	V_O	0.3 ~ VDDI + 0.3	V
Operating temperature range	T_{OPR}	-40 ~ +85	℃
Storage temperature range	T_{STG}	-55 ~ +125	℃

Note: If one of the above items is exceeded its maximum limitation momentarily, the quality of the product may be degraded. Absolute maximum limitation, therefore, specify the values exceeding which the product may be physically damaged. Be sure to use the product within the recommend range.

7.2 DC characteristic

Parameter	Symbol	Condition	Specification			Unit	Related Pins
			Min	TYP	Max		
Power & operation voltage							
System voltage	VDD	Operating voltage	2.5	2.8	3.3	V	
Interface operation voltage	VDDI	I/O supply voltage	1.6	1.8/2.8	3.3	V	
Digital operating voltage	VCC	Digital supply voltage	1.6		2.0	V	
Gate driver high voltage	VGH		9.41		16.17	V	
Gate driver low voltage	VGL		-13.48		-7.06	V	
Gate driver supply voltage		| VGH-VGL |	16.47		29.65	V	
Input / Output							
Logic-high input voltage	V_{IH}		0.7VDDI		VDDI	V	Note 1
Logic-low input voltage	V_{IL}		VSS		0.3VDDI	V	Note 1
Logic-high output voltage	V_{OH}	I_{OH} = -1.0mA	0.8VDDI		VDDI	V	Note 1
Logic-low output voltage	V_{OL}	I_{OL} = +1.0mA	VSS		0.2VDDI	V	Note 1
Logic-high input current	I_{IH}	VIN = VDDI			1	uA	Note 1
Logic-low input current	I_{IL}	VIN = VSS	-1			uA	Note 1
Input leakage current	I_{IL}	IOH = -1.0mA	-0.1		+0.1	uA	Note 1
VCOM voltage							
VCOM high voltage	VCOMH	Ccom=12nF	2.5		5.0	V	
VCOM low voltage	VCOML	Ccom=12nF	-2.5		0.0	V	
VCOM amplitude	VCOMAC	|VCOMH-VCOML|	4.0		6.0	V	
Source driver							
Source output range	Vsout		0.1		AVDD-0.1	V	
Gamma reference voltage	GVDD		3.0		5.0	V	
Source output settling time	Tr	Below with 99% precision			30	us	Note 2
Output deviation voltage (Source output channel)	Vdev	Sout >=4.2V, Sout<=0.8V			20	mV	Note 2
		4.2V>Sout>0.8V			15	mV	
Output offset voltage	V_{OFFSET}				35	mV	Note 3
Step-up circuit							
Internal reference voltage	V_{REF}		0		1	%	
1st step-up (VDDx2) voltage	AVDD		4.95 *4		6.0 *5	V	
1st step-up (VDDx2) drop voltage	VDDx2,dorp	I AVDD = 1.0mA (include panel loading)			5%	%	
Linear range	V_{Linear}		0.2		AVDD-0.2	V	

Note 1: VDDI=1.6 to 3.3V, VDD=2.5 to 3.3V, AGND=DGND=0V, T_A=-30 to 70 ℃
Note 2, Source channel loading= 10pF/channel, Gate channel loading=50pF/channel.
Note 3, The Max. value is between measured point of source output and gamma setting value.
Note 4, VDD=2.6V or VCI1=2.6V
Note 5, VDD=3.0V or VCI1=3.0V

7.3 Power consumption

Operation mode	Inversion mode	Image	Current consumption			
			Typical		Maximum	
			IDDI (uA)	IDD (mA)	IDDI (mA)	IDD (mA)
-Normal mode	One Line	Note 1			1	1.10
	One Line	Note 2			1	1.10
-Partial + Idle mode (40 lines)	One Line	Note 3			1	0.3
-Sleep-in mode	N/A	N/A			1	3uA

Notes:
1. All pixels black.
2. Grayscale from top to bottom.
3. Black & white checker board 4 by 4.

8. Timing chart

8.1 Parallel interface characteristics: 18, 16, 9 or 8-bits bus (8080-series MCU interface)

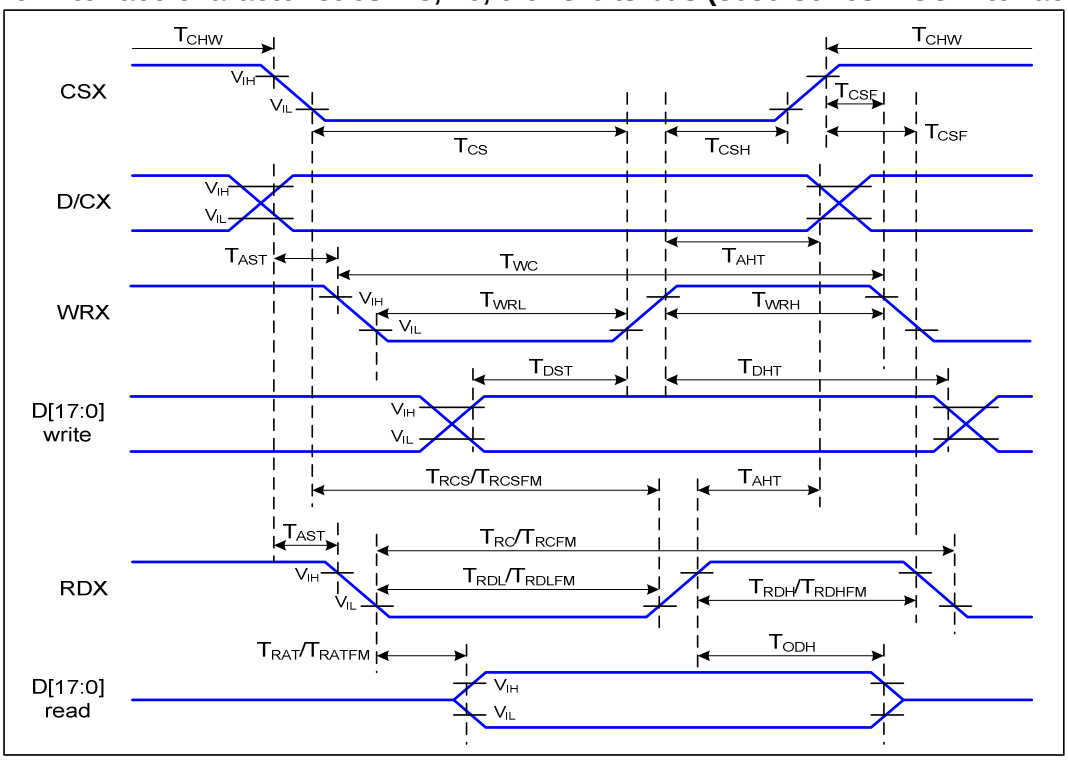

Fig. 8.1.1 Parallel interface timing characteristics (8080-series MCU interface)

Signal	Symbol	Parameter	Min	Max	Unit	Description
D/CX	T_{AST}	Address setup time	5		ns	-
	T_{AHT}	Address hold time (Write/Read)	10		ns	
CSX	T_{CHW}	Chip select "H" pulse width	0		ns	-(3-transfer for one pixel)
	T_{CS}	Chip select setup time (Write)	20		ns	
	T_{RCS}	Chip select setup time (Read ID)	20		ns	
	T_{RCSFM}	Chip select setup time (Read FM)	20		ns	
	T_{CSF}	Chip select wait time (Write/Read)	10		ns	
	T_{CSH}	Chip select hold time	20		ns	
WRX	T_{WC}	Write cycle	66		ns	
	T_{WRH}	Control pulse "H" duration	25		ns	
	T_{WRL}	Control pulse "L" duration	15		ns	
RDX (ID)	T_{RC}	Read cycle (ID)	160		ns	When read ID data
	T_{RDH}	Control pulse "H" duration (ID)	90		ns	
	T_{RDL}	Control pulse "L" duration (ID)	45		ns	
RDX (FM)	T_{RCFM}	Read cycle (FM)	160		ns	When read from frame memory
	T_{RDHFM}	Control pulse "H" duration (FM)	90		ns	
	T_{RDLFM}	Control pulse "L" duration (FM)	45		ns	
D[17:0]	T_{DST}	Data setup time	15		ns	For maximum CL=30pF For minimum CL=8pF
	T_{DHT}	Data hold time	15		ns	
	T_{ODH}	Output disable time	20	80	ns	

Note: VDDI=1.6 to 3.3V, VDD=2.5 to 3.3V, AGND=DGND=0V, Ta=-30 to 70 ℃

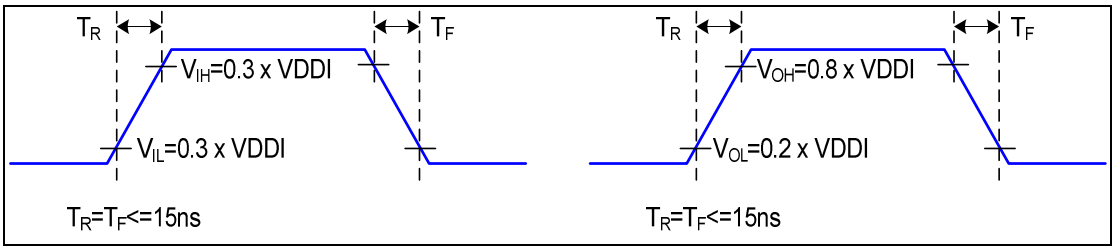

Fig. 8.1.2 Rising and falling timing for input and output signal

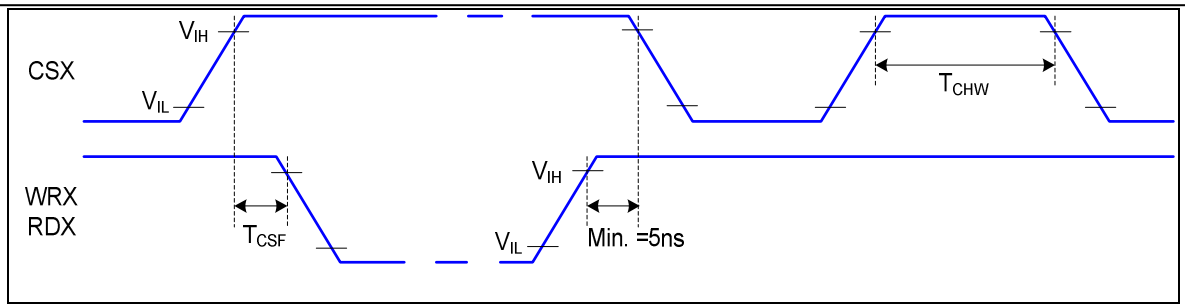

Fig.8.1.3 Chip selection (CSX) timing

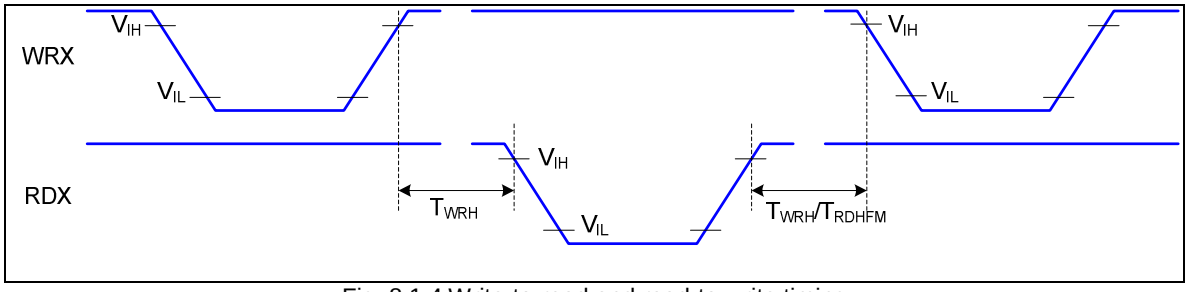

Fig. 8.1.4 Write-to-read and read-to-write timing

Note: The rising time and falling time (Tr, Tf) of input signal are specified at 15 ns or less. Logic high and low levels are specified as 30% and 70% of VDDI for Input signals.

8.2 Parallel interface characteristics: 18, 16, 9 or 8-bits bus (6800-series MCU interface)

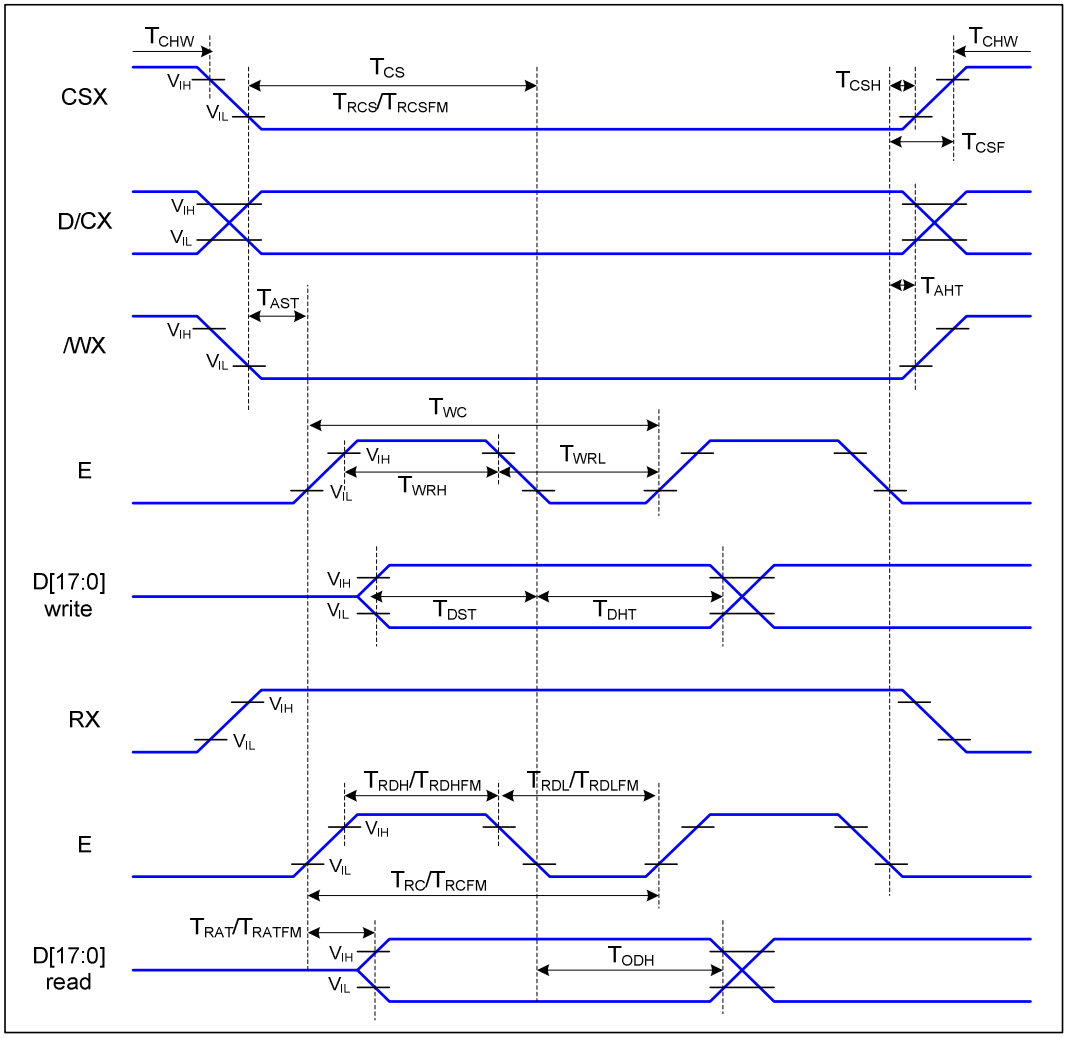

Fig. 8.2.1 Parallel interface timing characteristics (6800-series MCU interface)

Signal	Symbol	Parameter	Min	Max	Unit	Description
D/CX	T_{AST}	Address setup time	5		ns	-
	T_{AHT}	Address hold time (Write/Read)	10		ns	
CSX	T_{CHW}	Chip select "H" pulse width	0		ns	-
	T_{CS}	Chip select setup time (Write)	20		ns	
	T_{RCS}	Chip select setup time (Read ID)	20		ns	
	T_{RCSFM}	Chip select setup time (Read FM)	20		ns	
	T_{CSF}	Chip select wait time (Write/Read)	10		ns	
	T_{CSH}	Chip select hold time	20		ns	
WRX	T_{WC}	Write cycle	66		ns	
	T_{WRH}	Control pulse "H" duration	25		ns	
	T_{WRL}	Control pulse "L" duration	15		ns	
RDX (ID)	T_{RC}	Read cycle (ID)	160		ns	When read ID data
	T_{RDH}	Control pulse "H" duration (ID)	90		ns	
	T_{RDL}	Control pulse "L" duration (ID)	45		ns	
RDX (FM)	T_{RCFM}	Read cycle (FM)	160		ns	When read from frame memory
	T_{RDHFM}	Control pulse "H" duration (FM)	90		ns	
	T_{RDLFM}	Control pulse "L" duration (FM)	45		ns	
D[17:0]	T_{DST}	Data setup time	15		ns	For maximum CL=30pF For minimum CL=8pF
	T_{DHT}	Data hold time	15		ns	
	T_{ODH}	Output disable time	20	80	ns	

Note 1: VDDI=1.6 to 3.3V, VDD=2.5 to 3.3V, AGND=DGND=0V, Ta=-30 to 70℃
Note 2: The rising time and falling time (Tr, Tf) of input signal are specified at 15 ns or less. Logic high and low levels are specified as 30% and 70% of VDDI for Input signals

8.3 Serial interface characteristics (3-line serial)

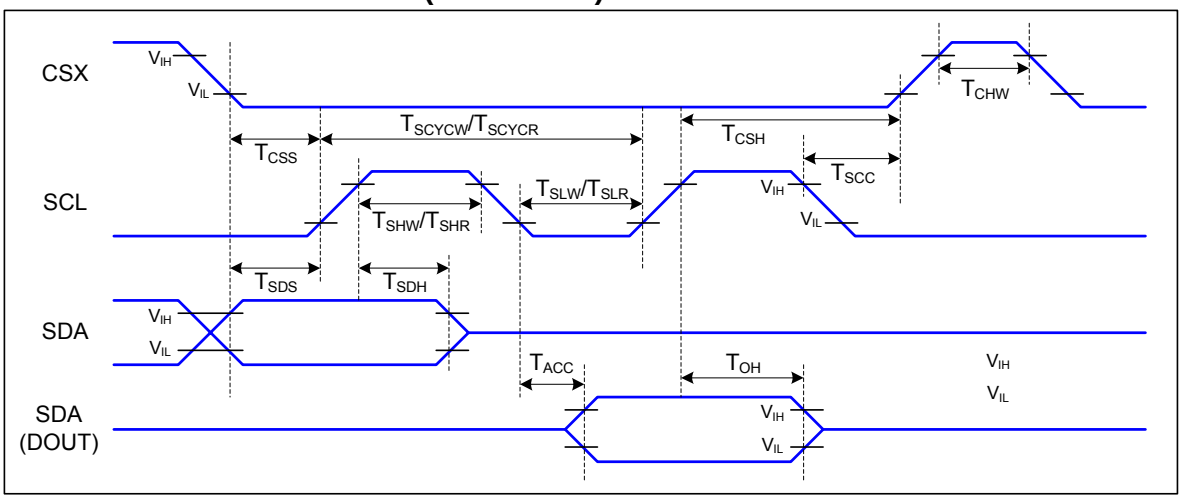

Fig. 8.3.1 3-line serial interface timing

Signal	Symbol	Parameter	Min	Max	Unit	Description
CSX	T_{CSS}	Chip select setup time (write)	45		ns	
	T_{CSH}	Chip select hold time (write)	45		ns	
	T_{CSS}	Chip select setup time (read)	12		ns	
	T_{SCC}	Chip select hold time (read)	20		ns	
	T_{CHW}	Chip select "H" pulse width	0		ns	
SCL	T_{SCYCW}	Serial clock cycle (Write)	54		ns	
	T_{SHW}	SCL "H" pulse width (Write)	12		ns	
	T_{SLW}	SCL "L" pulse width (Write)	12		ns	
	T_{SCYCR}	Serial clock cycle (Read)	150		ns	
	T_{SHR}	SCL "H" pulse width (Read)	60		ns	
	T_{SLR}	SCL "L" pulse width (Read)	60		ns	
SDA (DIN) (DOUT)	T_{SDS}	Data setup time	10		ns	For maximum CL=30pF For minimum CL=8pF
	T_{SDH}	Data hold time	10		ns	
	T_{ACC}	Access time	10	40	ns	
	T_{OH}	Output disable time		40	ns	

Table 8.3: 3-line Serial Interface Characteristics

Note 1: VDDI=1.6 to 3.3V, VDD=2.5 to 3.3V, AGND=DGND=0V, Ta=-30 to 70℃
Note 2: The rising time and falling time (Tr, Tf) of input signal are specified at 15 ns or less. Logic high and low levels are specified as 30% and 70% of VDDI for Input signals.

8.4 Serial interface characteristics (4-line serial)

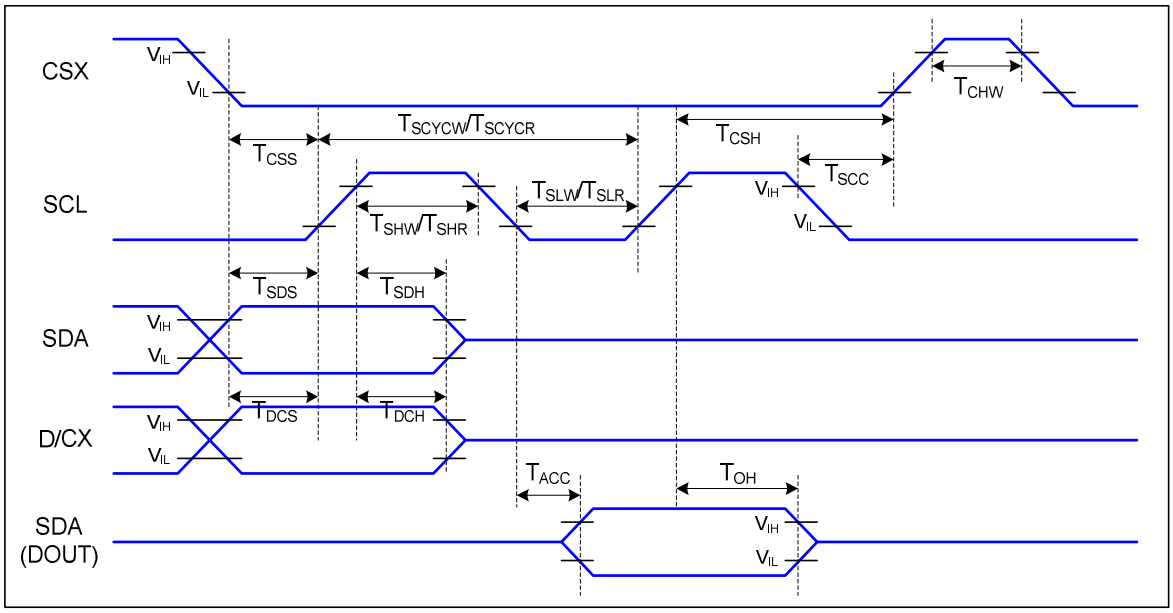

Fig. 8.4.1 4-line serial interface timing

Signal	Symbol	Parameter	MIN	MAX	Unit	Description
CSX	T_{CSS}	Chip select setup time (write)	45		ns	
	T_{CSH}	Chip select hold time (write)	45		ns	
	T_{CSS}	Chip select setup time (read)	12		ns	
	T_{SCC}	Chip select hold time (read)	20		ns	
	T_{CHW}	Chip select “H” pulse width	0		ns	
SCL	T_{SCYCW}	Serial clock cycle (Write)	54		ns	-write command & data ram
	T_{SHW}	SCL “H” pulse width (Write)	12		ns	
	T_{SLW}	SCL “L” pulse width (Write)	12		ns	
	T_{SCYCR}	Serial clock cycle (Read)	150		ns	-read command & data ram
	T_{SHR}	SCL “H” pulse width (Read)	60		ns	
	T_{SLR}	SCL “L” pulse width (Read)	60		ns	
D/CX	T_{DCS}	D/CX setup time	10		Ns	
	T_{DCH}	D/CX hold time	10		ns	
SDA (DIN) (DOUT)	T_{SDS}	Data setup time	10		ns	
	T_{SDH}	Data hold time	10		ns	
	T_{ACC}	Access time	10	40	ns	For maximum CL=30pF
	T_{OH}	Output disable time		40	ns	For minimum CL=8pF

Table 8.4: 4-line Serial Interface Characteristics

Note 1: VDDI=1.6 to 3.3V, VDD=2.5 to 3.3V, AGND=DGND=0V, Ta=-30 to 70 ℃
Note 2: The rising time and falling time (Tr, Tf) of input signal are specified at 15 ns or less. Logic high and low levels are specified as 30% and 70% of VDDI for Input signals.

9. Function description

9.1 Interface type selection

The selection of given interfaces are done by setting P68, IM2, IM1, and IM0 pins as shown in following table.

Table 9.1.1 Selection of MCU interface

P68	IM2	IM1	IM0	Interface	Read back selection
-	0	-	-	3-line serial interface	Via the read instruction
0	1	0	0	8080 MCU 8-bit parallel	RDX strobe (8-bit read data and 8-bit read parameter)
0	1	0	1	8080 MCU 16-bit parallel	RDX strobe (16-bit read data and 8-bit read parameter)
0	1	1	0	8080 MCU 9-bit parallel	RDX strobe (9-bit read data and 8-bit read parameter)
0	1	1	1	8080 MCU 18-bit parallel	RDX strobe (18-bit read data and 8-bit read parameter)
-	0	-	-	3-line serial interface	Via the read instruction
1	1	0	0	6800 MCU 8-bit parallel	E strobe (8-bit read data and 8-bit read parameter)
1	1	0	1	6800 MCU 16-bit parallel	E strobe (16-bit read data and 8-bit read parameter)
1	1	1	0	6800 MCU 9-bit parallel	E strobe (9-bit read data and 8-bit read parameter)
1	1	1	1	6800 MCU 18-bit parallel	E strobe (18-bit read data and 8-bit read parameter)

Table 9.1.2 Pin connection according to various MCU interface

P68	IM2	IM1	IM0	Interface	RDX	WRX	D/CX	Read back selection
-	0	-	-	3-line serial interface	Note1	Note1	SCL	D[17:1]: unused, D0: SDA
0	1	0	0	8080 8-bit parallel	RDX	WRX	D/CX	D[17:8]: unused, D7-D0: 8-bit data
0	1	0	1	8080 16-bit parallel	RDX	WRX	D/CX	D[17:16]: unused, D15-D0: 16-bit data
0	1	1	0	8080 9-bit parallel	RDX	WRX	D/CX	D[17:9]: unused, D8-D0: 9-bit data
0	1	1	1	8080 18-bit parallel	RDX	WRX	D/CX	D17-D0: 18-bit data
-	0	-	-	3-line serial interface	Note1	D/CX	SCL	D[17:1]: unused, D0: SDA
1	1	0	0	6800 8-bit parallel	E	WRX	RS	D[17:8]: unused, D7-D0: 8-bit data
1	1	0	1	6800 16-bit parallel	E	WRX	RS	D[17:16]: unused, D15-D0: 16-bit data
1	1	1	0	6800 9-bit parallel	E	WRX	RS	D[17:9]: unused, D8-D0: 9-bit data
1	1	1	1	6800 18-bit parallel	E	WRX	RS	D17-D0: 18-bit data

Note 1. Unused pins can be open, or connected to DGND or VDDI.

9.2 8080-series MCU parallel interface (P68='0')

The MCU can use one of following interfaces: 11-lines with 8-data parallel interface, 12-lines with 9-data parallel interface, 19-line with 16-data parallel interface or 21-lines with 18-data parallel interface. The chip-select CSX (active low) enables/disables the parallel interface. RESX (active low) is an external reset signal. WRX is the parallel data write enable, RDX is the parallel data read enable and D[17:0] is parallel data bus.

The LCD driver reads the data at the rising edge of WRX signal. The D/CX is the data/command flag. When D/CX='1', D[17:0] bits is either display data or command parameter. When D/C='0', D[17:0] bits is command.

The 6800-series bi-directional interface can be used for communication between the micro controller and LCD driver. The selection of this interface is done when P68 pin is in low state (DGND). Interface bus width can be selected with IM2, IM1 and IM0.

The interface functions of 8080-series parallel interface are given in following table.

Table 9.2.1 The function of 8080-series parallel interface

P68	IM2	IM1	IM0	Interface	D/CX	RDX	WRX	Read back selection
0	1	0	0	8-bit parallel	0	1	↑	Write 8-bit command (D7 to D0)
					1	1	↑	Write 8-bit display data or 8-bit parameter (D7 to D0)
					1	↑	1	Read 8-bit display data (D7 to D0)
					1	↑	1	Read 8-bit parameter or status (D7 to D0)
0	1	0	1	16-bit parallel	0	1	↑	Write 8-bit command (D7 to D0)
					1	1	↑	Write 16-bit display data or 8-bit parameter (D15 to D0)
					1	↑	1	Read 16-bit display data (D15 to D0)
					1	↑	1	Read 8-bit parameter or status (D7 to D0)
0	1	1	0	9-bit parallel	0	1	↑	Write 8-bit command (D7 to D0)
					1	1	↑	Write 9-bit display data or 8-bit parameter (D8 to D0)
					1	↑	1	Read 9-bit display data (D8 to D0)
					1	↑	1	Read 8-bit parameter or status (D7 to D0)
0	1	1	1	18-bit parallel	0	1	↑	Write 8-bit command (D7 to D0)
					1	1	↑	Write 18-bit display data or 8-bit parameter (D17 to D0)
					1	↑	1	Read 18-bit display data (D17 to D0)
					1	↑	1	Read 8-bit parameter or status (D7 to D0)

Note: applied for command code: DAh, DBh, DCh, 04h, 09h, 0Ah, 0Bh, 0Ch, 0Dh, 0Eh, 0Fh

9.2.1 Write cycle sequence

The write cycle means that the host writes information (command or/and data) to the display via the interface. Each write cycle (WRX high-low-high sequence) consists of 3 control signals (D/CX, RDX, WRX) and data signals (D[17:0]). D/CX bit is a control signal, which tells if the data is a command or a data. The data signals are the command if the control signal is low (='0') and vice versa it is data (='1').

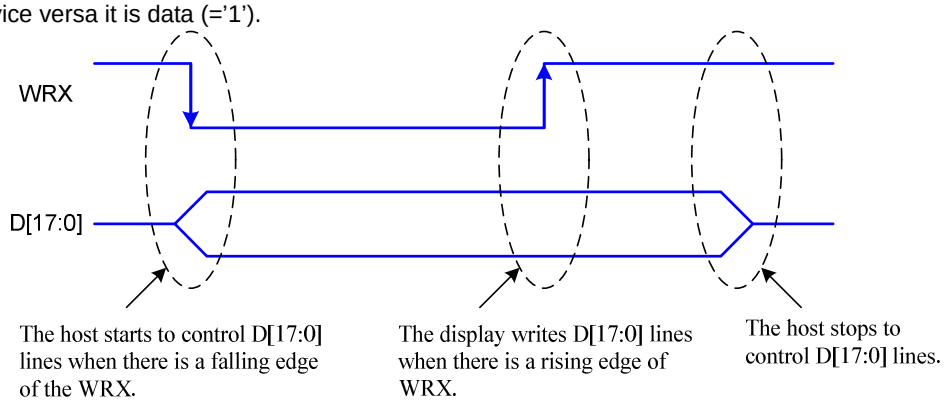

Fig. 9.2.1 8080-series WRX protocol

Note: WRX is an unsynchronized signal (It can be stopped).

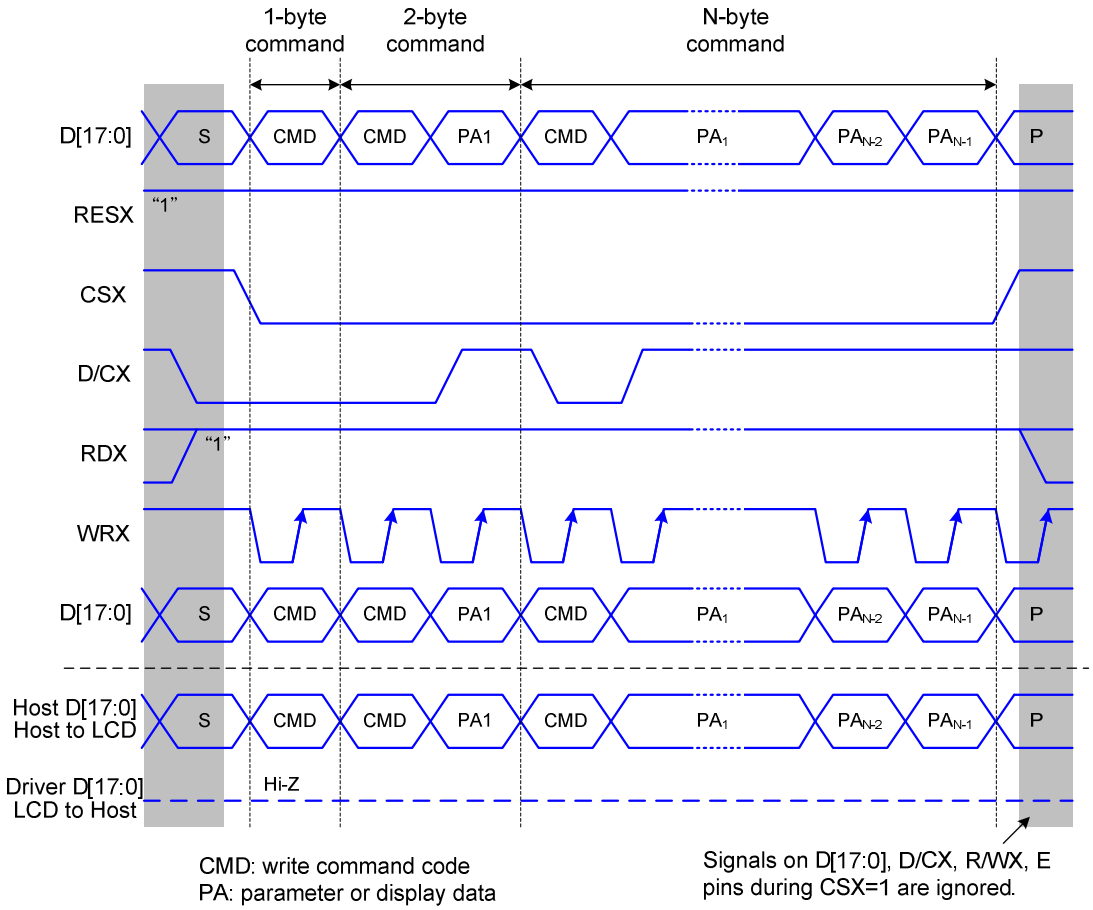

Fig. 9.2.2 8080-series parallel bus protocol, write to register or display RAM

9.2.2 Read cycle sequence

The read cycle (RDX high-low-high sequence) means that the host reads information from LCD driver via interface. The driver sends data (D[17:0]) to the host when there is a falling edge of RDX and the host reads data when there is a rising edge of RDX.

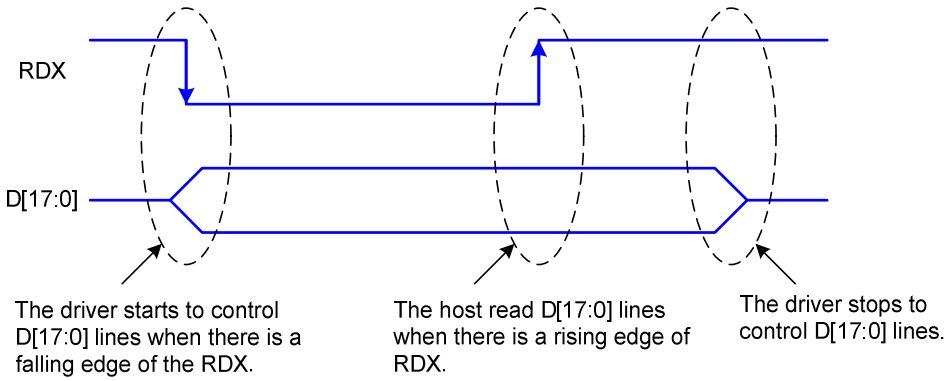

Fig. 9.2.3 8080-series RDX protocol

Note: RDX is an unsynchronized signal (It can be stopped).

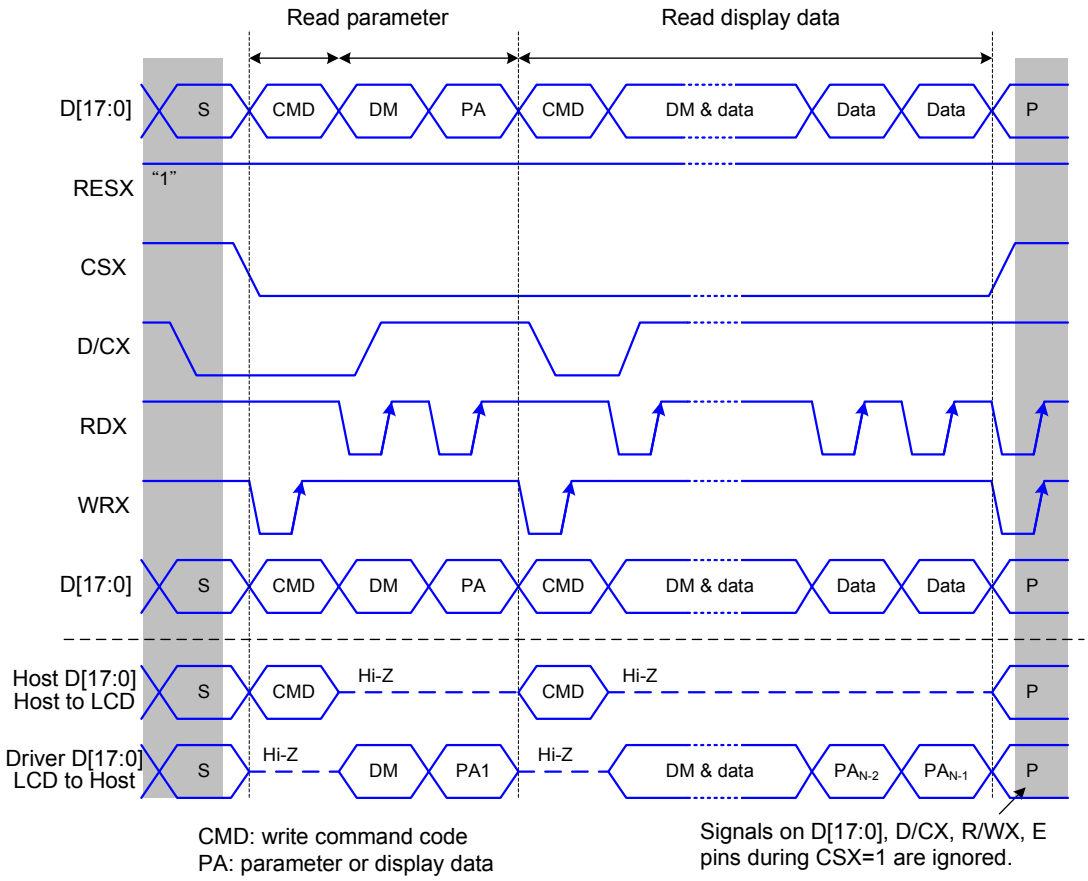

Fig. 9.2.4 8080-series parallel bus protocol, read data from register or display RAM

9.3 6800-Series Parallel Interface (P68='1')

The MCU uses one of following interface: 11-lines with 8-data parallel interface, 12-lines with 9-data parallel interface, 19-lines with 16-data parallel interface, or 21-lines with 18-data parallel interface. The chip-select CSX(active low) enables and disables the parallel interface. RESX (active low) is an external reset signal. The R/WX is the Read/Write flag and D[17:0] is parallel data bus.

The LCD driver reads the data at the falling edge of E signal when R/WX= '1' and Writes the data at the falling of the E signal when R/WX='0'. The D/CX is the data/command flag. When D/CX='1', D[17:0] bits are display RAM data or command parameters. When D/C= '0', D[17:0] bits are commands.

The 6800-series bi-directional interface can be used for communication between the micro controller and LCD driver. The selection of this interface is done when P68 pin is high state (VDDI). Interface bus width can be selected with IM2, IM1 and IM0.

The interface functions of 6800-series parallel interface are given in Table 9.3.1.

Table 9.3.1 The function of 6800-series parallel interface

P68	IM2	IM1	IM0	Interface	D/CX	R/WX	E	Function
1	1	0	0	8-bit Parallel	0	0	↓	Write 8-bit command (D7 to D0)
					1	0	↓	Write 8-bit display data or 8-bit parameter (D7 to D0)
					1	1	↓	Read 8-bit Display data (D7 to D0)
					1	1	↓	Read 8-bit parameter or status (D7 to D0)
1	1	0	1	16-bit Parallel	0	0	↓	Write 8-bit command (D7 to D0)
					1	0	↓	Write 16-bit display data or 8-bit parameter (D15 to D0)
					1	1	↓	Read 16-bit Display data (D15 to D0)
					1	1	↓	Read 8-bit parameter or status (D7 to D0)
1	1	1	0	9-bit Parallel	0	0	↓	Write 8-bit command (D7 to D0)
					1	0	↓	Write 9-bit display data or 8-bit parameter (D8 to D0)
					1	1	↓	Read 9-bit Display data (D8 to D0)
					1	1	↓	Read 8-bit parameter or status (D7 to D0)
1	1	1	1	18-bit Parallel	0	0	↓	Write 8-bit command (D7 to D0)
					1	0	↓	Write 18-bit display data or 8-bit parameter (D17 to D0)
					1	1	↓	Read 18-bit Display data (D17 to D0)
					1	1	↓	Read 8-bit parameter or status (D7 to D0)

Note: applied for command code: DAh, DBh, DCh, 04h, 09h, 0Ah, 0Bh, 0Ch, 0Dh, 0Eh, 0Fh.

9.3.1 Write cycle sequence

The write cycle means that the host writes information (command or/and data) to the display via the interface. Each write cycle (E low-high-low sequence) consists of 3 control signals (D/CX, E, R/WX) and data signals (D[17:0]). D/CX bit is a control signal, which tells if the data is a command or a data. The data signals are the command if the control signal is low (='0') and vice versa it is data (='1').

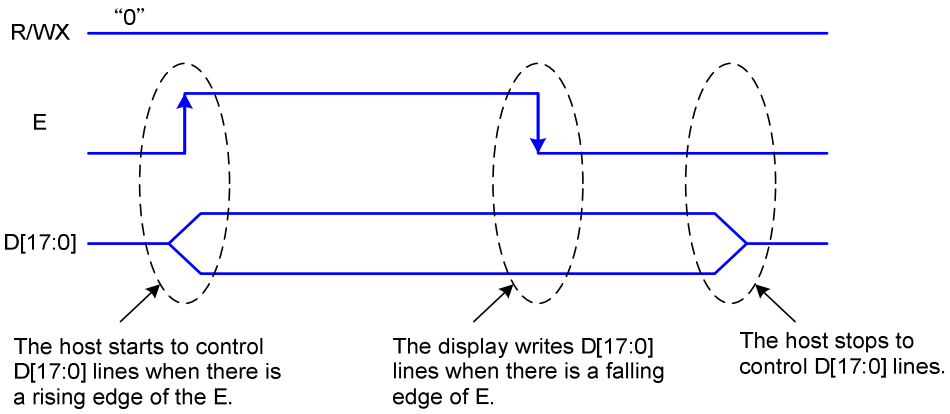

Fig. 9.3.1 6800-Series Write Protocol

Note: E is an unsynchronized signal (It can be stopped)

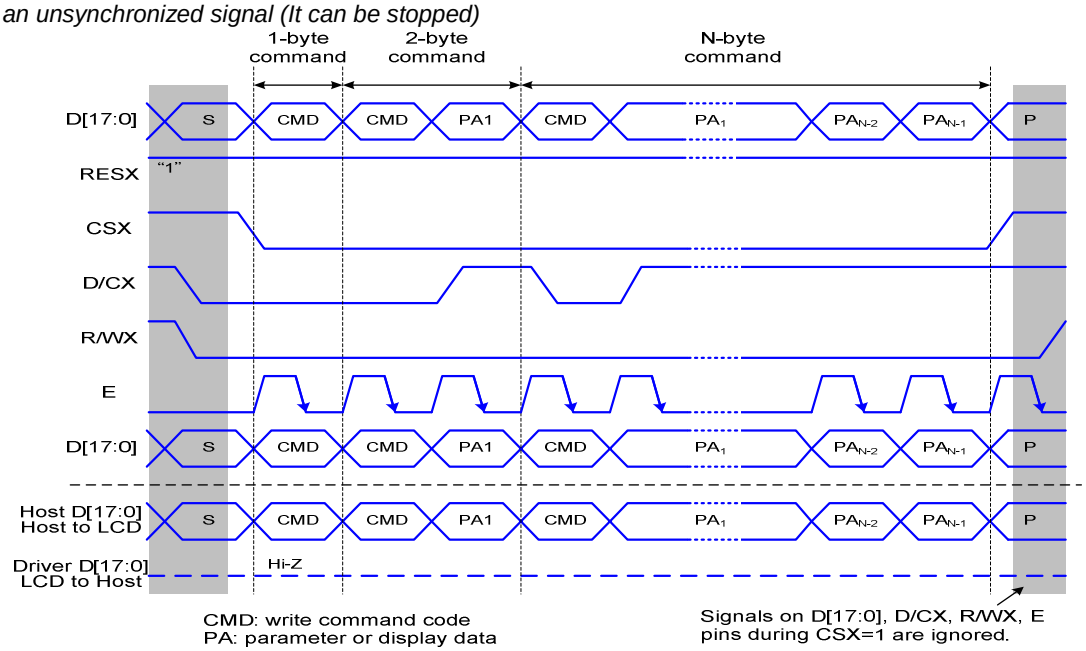

Fig. 9.3.2 6800-series parallel bus protocol, write to register or display RAM

9.3.2 Read cycle sequence

The read cycle (E low-high-low sequence) means that the host reads information from LCD driver via interface. The driver sends data (D[17:0]) to the host when there is a rising edge of E and the host reads data when there is a falling edge of E.

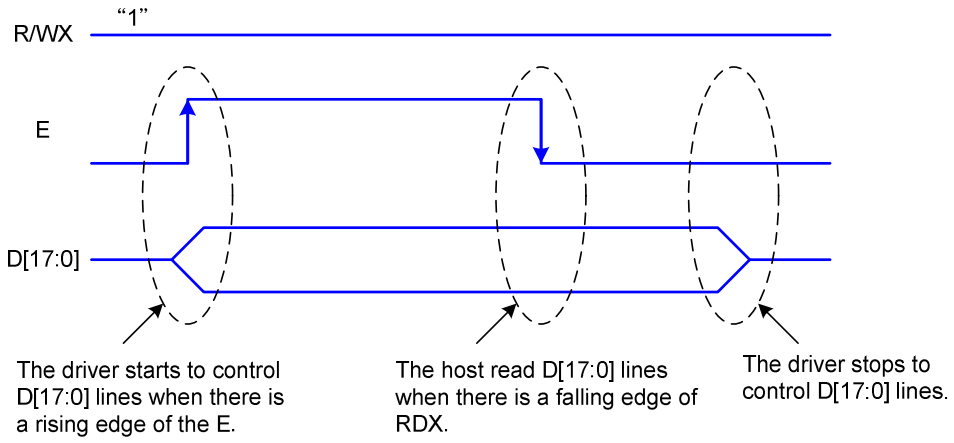

Fig. 9.3.3 6800-series read protocol

Note: E is an unsynchronized signal (It can be stopped)

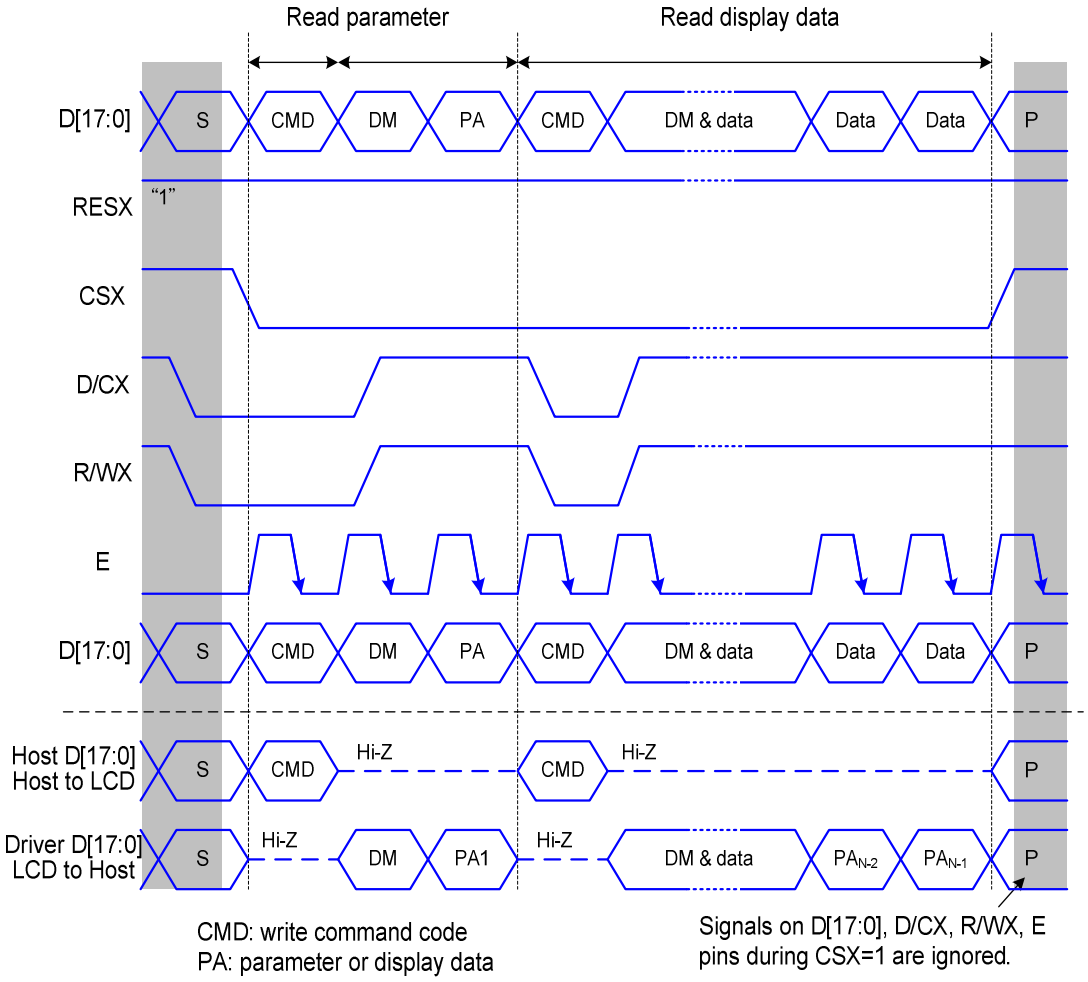

Fig. 9.3.4 6800-series parallel bus protocol, read data form register or display RAM

9.4 Serial interface

The selection of this interface is done by IM2. See the Table 9.4.1.

Table 9.4.1 Selection of serial interface

IM2	4WSPI	Interface	Read back selection
0	0	3-line serial interface	Via the read instruction (8-bit, 24-bit and 32-bit read parameter)
0	1	4-line serial interface	Via the read instruction (8-bit, 24-bit and 32-bit read parameter)

The serial interface is either 3-lines/9-bits or 4-lines/8-bts bi-directional interface for communication between the micro controller and the LCD driver. The 3-lines serial interface use: CSX (chip enable), SCL (serial clock) and SDA (serial data input/output), and the 4-lines serial interface use: CSX (chip enable), D/CX (data/ command flag), SCL (serial clock) and SDA (serial data input/output). Serial clock (SCL) is used for interface with MCU only, so it can be stopped when no communication is necessary.

9.4.1 Command Write Mode

The write mode of the interface means the micro controller writes commands and data to the LCD driver. 3-lines serial data packet contains a control bit D/CX and a transmission byte. In 4-lines serial interface, data packet contains just transmission byte and control bit D/CX is transferred by the D/CX pin. If D/CX is “low”, the transmission byte is interpreted as a command byte. If D/CX is “high”, the transmission byte is stored in the display data RAM (memory write command), or command register as parameter.

Any instruction can be sent in any order to the driver. The MSB is transmitted first. The serial interface is initialized when CSX is high. In this state, SCL clock pulse or SDA data have no effect. A falling edge on CSX enables the serial interface and indicates the start of data transmission.

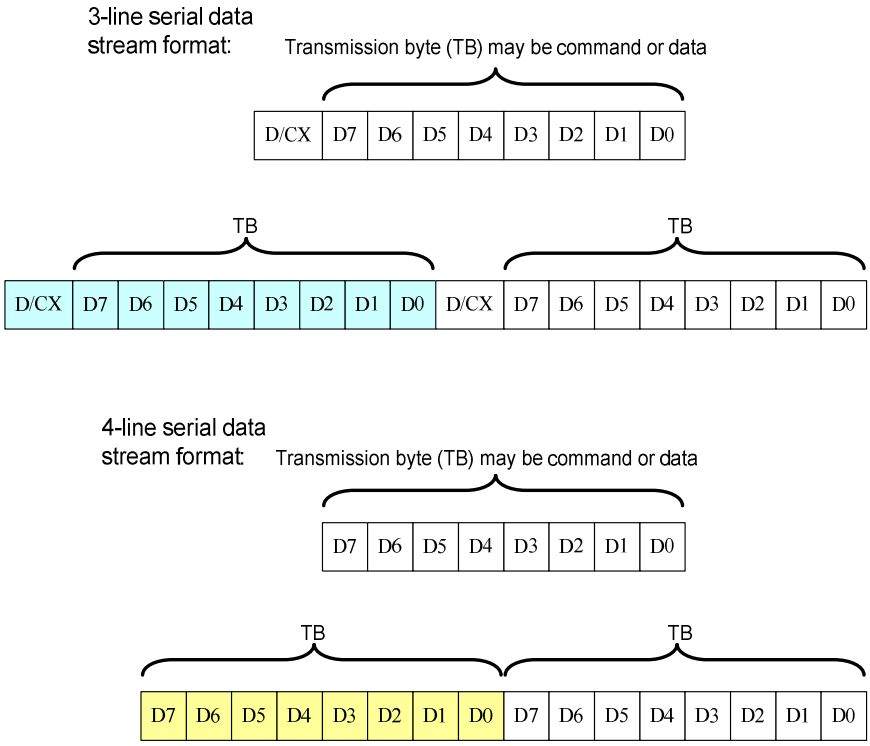

Fig. 9.4.1 Serial interface data stream format

When CSX is “high”, SCL clock is ignored. During the high period of CSX the serial interface is initialized. At the falling edge of CSX, SCL can be high or low (see Fig 9.4.2). SDA is sampled at the rising edge of SCL. D/CX indicates whether the byte is command (D/CX=’0’) or parameter/RAM data (D/CX=’1’). D/CX is sampled when first rising edge of SCL (3-lines serial interface) or 8th rising edge of SCL (4-lines serial interface). If CSX stays low after the last bit of command/data byte, the serial interface expects the D/CX bit (3-lines serial interface) or D7 (4-lines serial interface) of the next byte at the next rising edge of SCL.

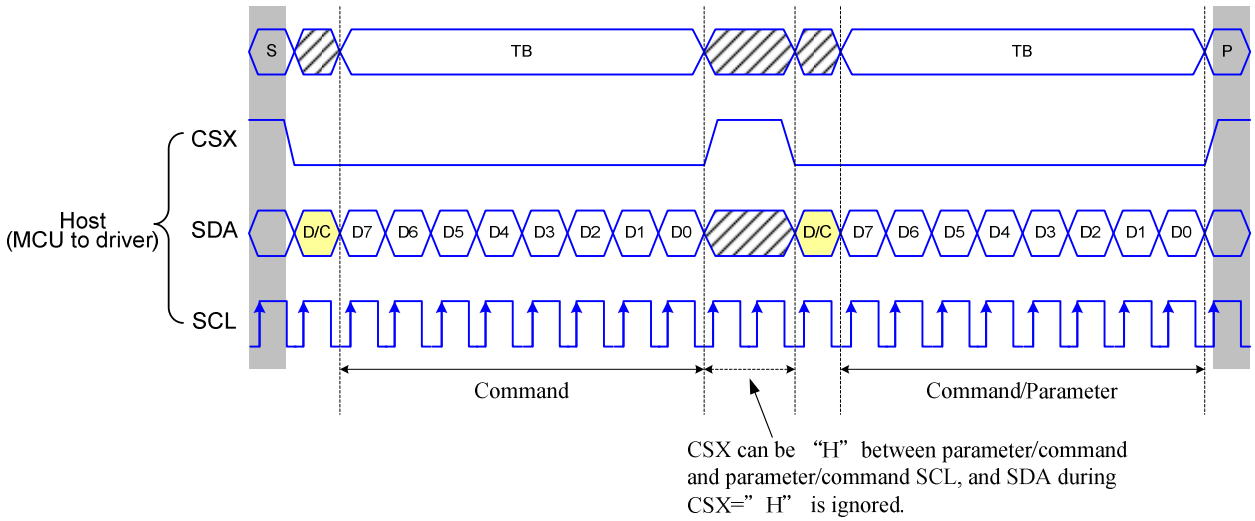

Fig. 9.4.2 3-line serial interface write protocol (write to register with control bit in transmission)

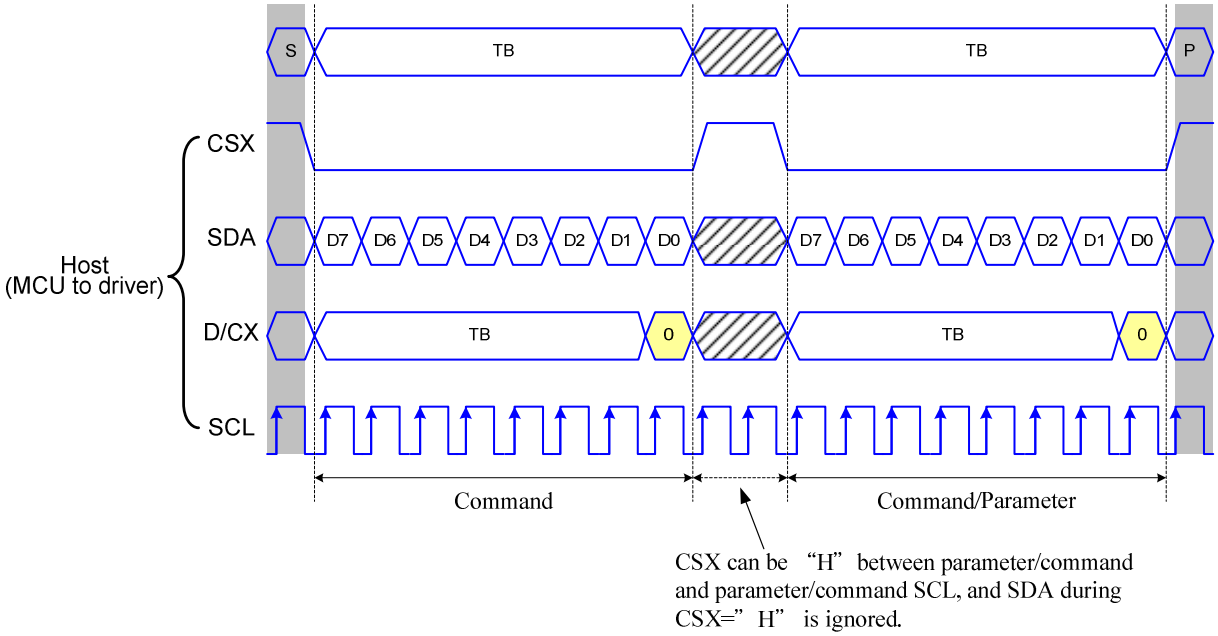

Fig. 9.4.3 4-line serial interface write protocol (write to register with control bit in transmission)

9.4.2 Read Functions

The read mode of the interface means that the micro controller reads register value from the driver. To achieve read function, the micro controller first has to send a command (read ID or register command) and then the following byte is transmitted in the opposite direction. After that CSX is required to go to high before a new command is send (see the below figure). The driver samples the SDA (input data) at rising edge of SCL, but shifts SDA (output data) at the falling edge of SCL. Thus the micro controller is supported to read at the rising edge of SCL.

After the read status command has been sent, the SDA line must be set to tri-state no later than at the falling edge of SCL of the last bit.

3-line serial protocol (for RDID1/RDID2/RDID3/0Ah/0Bh/0Ch/0Dh/0Eh/0Fh command: 8-bit read):

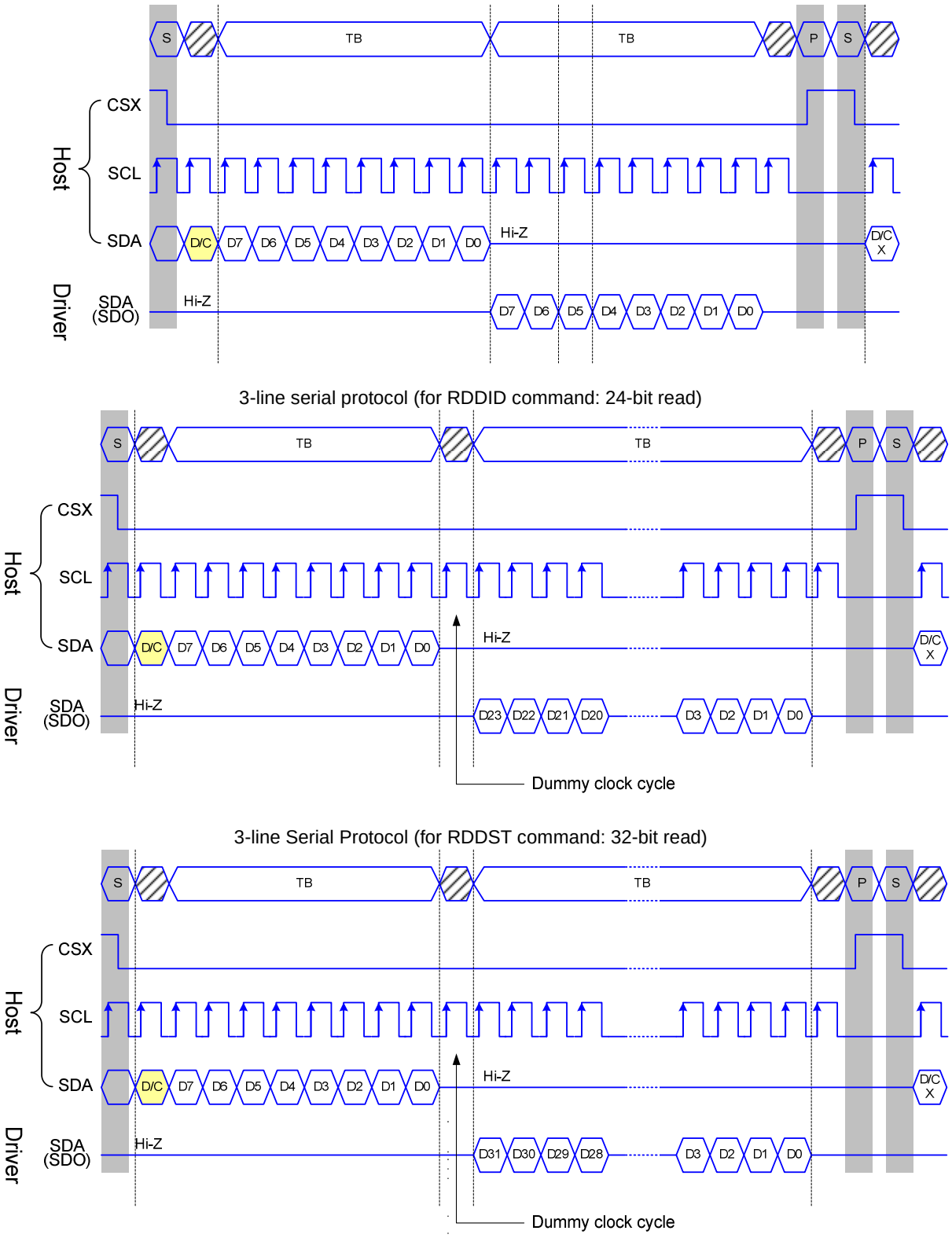

Fig. 9.4.4 3-line serial interface read protocol

4-line serial protocol (for RDID1/RDID2/RDID3/0Ah/0Bh/0Ch/0Dh/0Eh/0Fh command: 8-bit read):

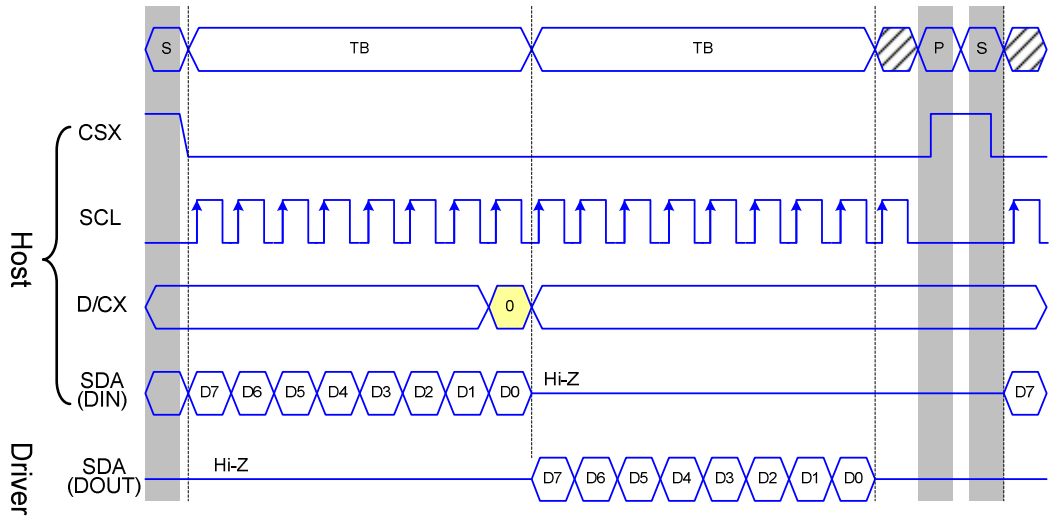

4-line serial protocol (for RDDID command: 24-bit read)

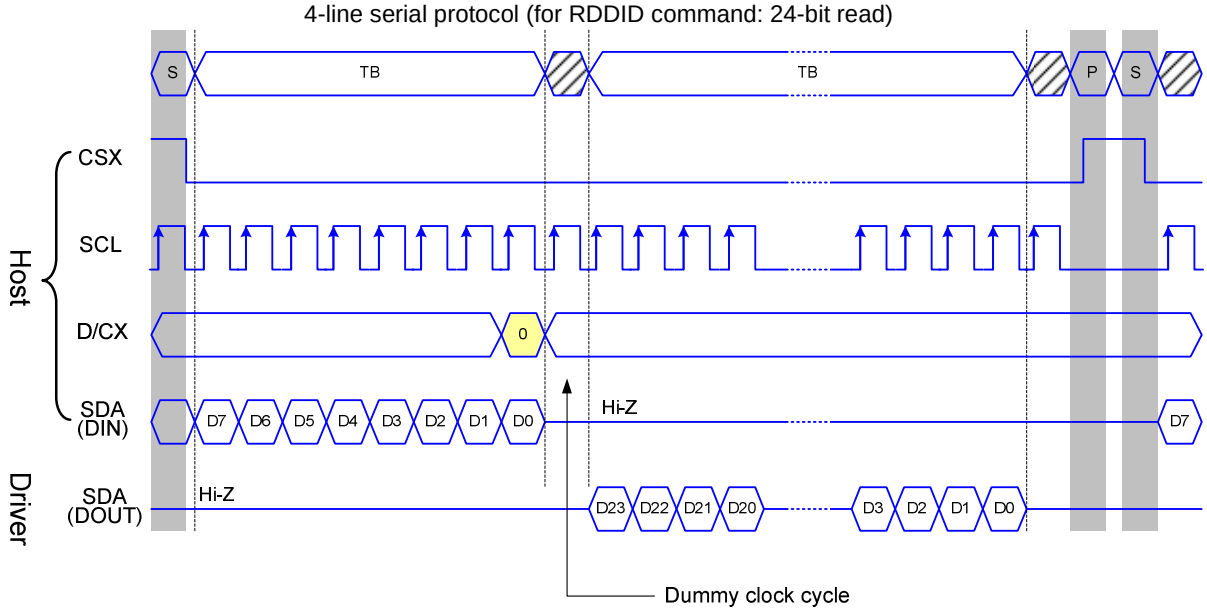

4-line Serial Protocol (for RDDST command: 32-bit read)

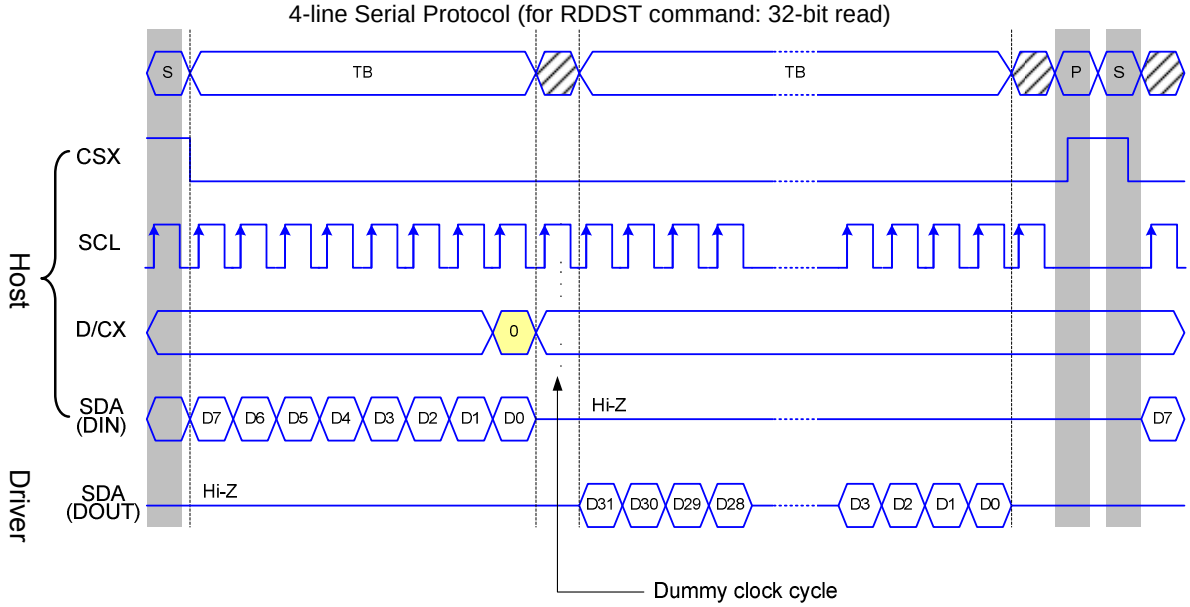

Fig. 9.4.5 4-line serial interface read protocol

9.5 Data Transfer Break and Recovery

If there is a break in data transmission by RESX pulse, while transferring a command or frame memory data or multiple parameter command data, before Bit D0 of the byte has been completed, then driver will reject the previous bits and have reset the interface such that it will be ready to receive command data again when the chip select line (CSX) is next activated after RESX have been HIGH state. See the following example

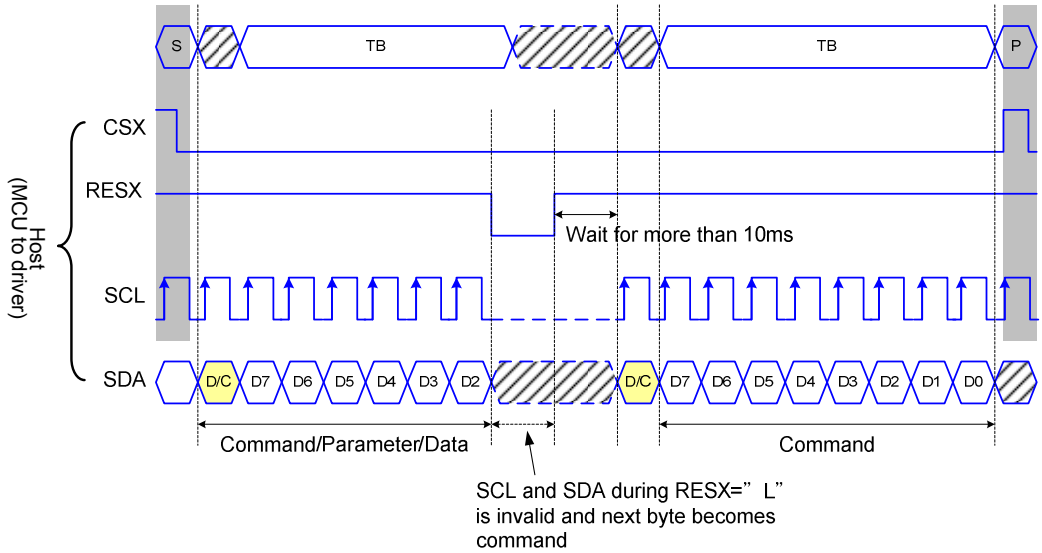

Fig. 9.5.1 Serial bus protocol, write mode – interrupted by RESX

If there is a break in data transmission by CSX pulse, while transferring a command or frame memory data or multiple parameter command data, before Bit D0 of the byte has been completed, then driver will reject the previous bits and have reset the interface such that it will be ready to receive the same byte re-transmitted when the chip select line (CSX) is next activated. See the following example

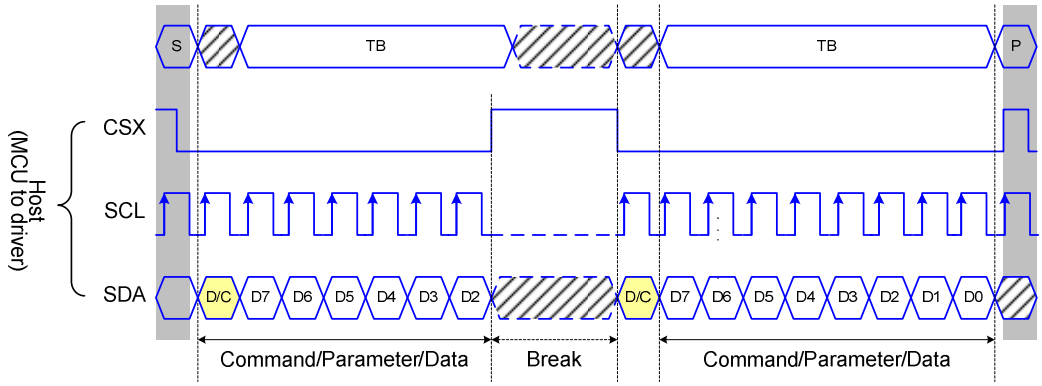

Fig. 9.5.2 Serial bus protocol, write mode – interrupted by CSX

If 1, 2 or more parameter commands are being sent and a break occurs while sending any parameter before the last one and if the host then sends a new command rather than re-transmitting the parameter that was interrupted, then the parameters that were successfully sent are stored and the parameter where the break occurred is rejected. The interface is ready to receive next byte as shown below.

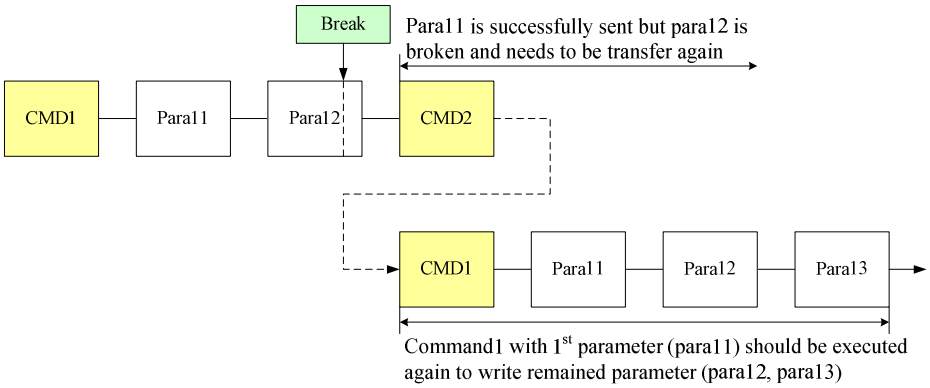

Fig.9.5.3 Write interrupts recovery (serial interface)

If a 2 or more parameter commands are being sent and a break occurs by the other command before the last one is sent, then the parameters that were successfully sent are stored and the other parameter of that command remains previous value.

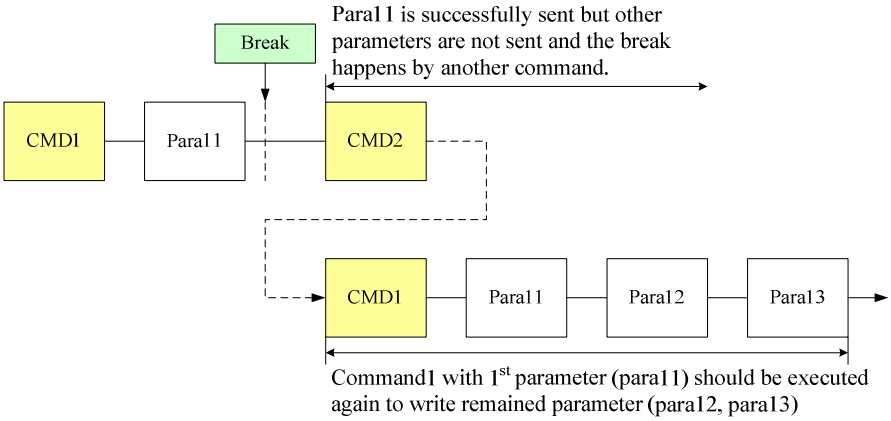

Fig. 9.5.4 Write interrupts recovery (both serial and parallel Interface)

9.6 Data transfer pause

It will be possible when transferring a command, frame memory data or multiple parameter data to invoke a pause in the data transmission. If the chip select line is released after a whole byte of a frame memory data or multiple parameter data has been completed, then driver will wait and continue the frame memory data or parameter data transmission from the point where it was paused. If the chip select Line is released after a whole byte of a command has been completed, then the display module will receive either the command‘s parameters (if appropriate) or a new command when the chip select line is next enabled as shown below.

This applies to the following 4 conditions:
1) Command-Pause-Command
2) Command-Pause-Parameter
3) Parameter-Pause-Command
4) Parameter-Pause-Parameter

9.6.1 Serial interface pause

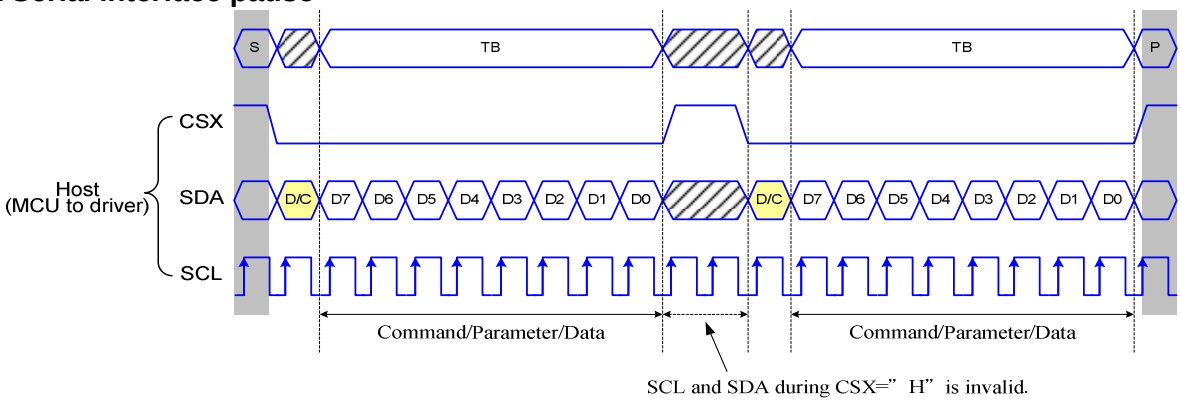

Fig. 9.6.1 Serial interface pause protocol (pause by CSX)

9.6.2 Parallel interface pause

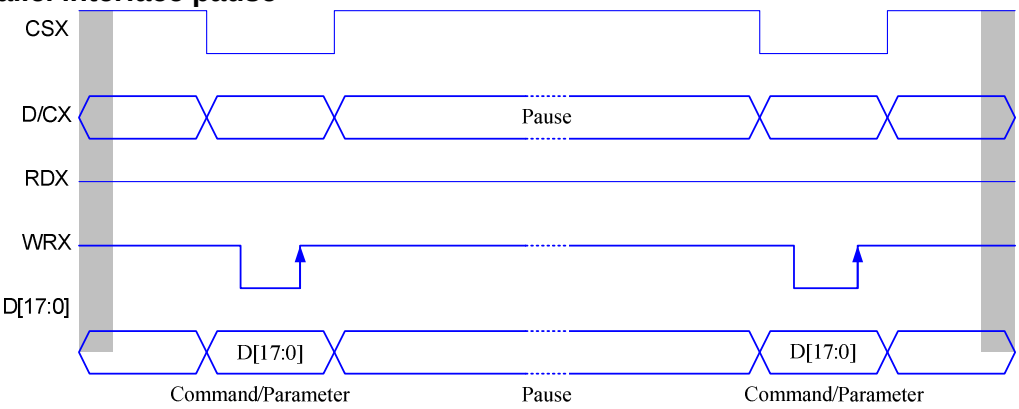

Fig. 9.6.2 Parallel bus pause protocol (paused by CSX)

9.7 Data Transfer Modes

The module has three kinds color modes for transferring data to the display RAM. These are 12-bits color per pixel, 16-bits color per pixel and 18-bits color per pixel. The data format is described for each interface. Data can be downloaded to the frame memory by 2 methods.

9.7.1 Method 1

The Image data is sent to the frame memory in successive frame writes, each time the frame memory is filled, the frame memory pointer is reset to the start point and the next frame is written.

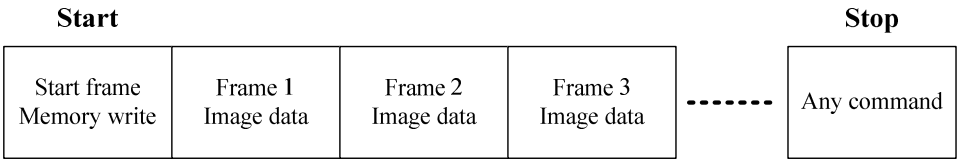

9.7.2 Method 2

Image data is sent and at the end of each frame memory download, a command is sent to stop frame memory write. Then start memory write command is sent, and a new frame is downloaded.

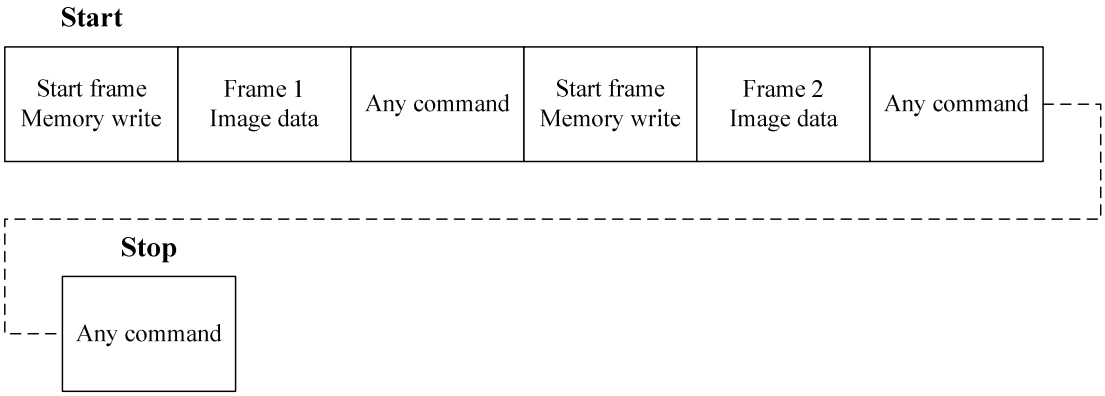

Note:
1) These apply to all data transfer Color modes on both serial and parallel interfaces.
2) The frame memory can contain both odd and even number of pixels for both methods. Only complete pixel data will be stored in the frame memory.

9.8 Data Color Coding

9.8.1 8-bit Parallel Interface (IM2, IM1, IM0= “100”)

Different display data formats are available for three Colors depth supported by listed below.
- 4k Colors, RGB 4,4,4-bit input,
- 65k Colors, RGB 5,6,5-bit input,.
- 262k Colors, RGB 6,6,6-bit input,

9.8.1.1 8-bit data bus for 12-bit/pixel (RGB 4-4-4-bit input), 4K-Colors, 3AH= “03h”

There are 2 pixels (6 sub-pixels) per 3-bytes.

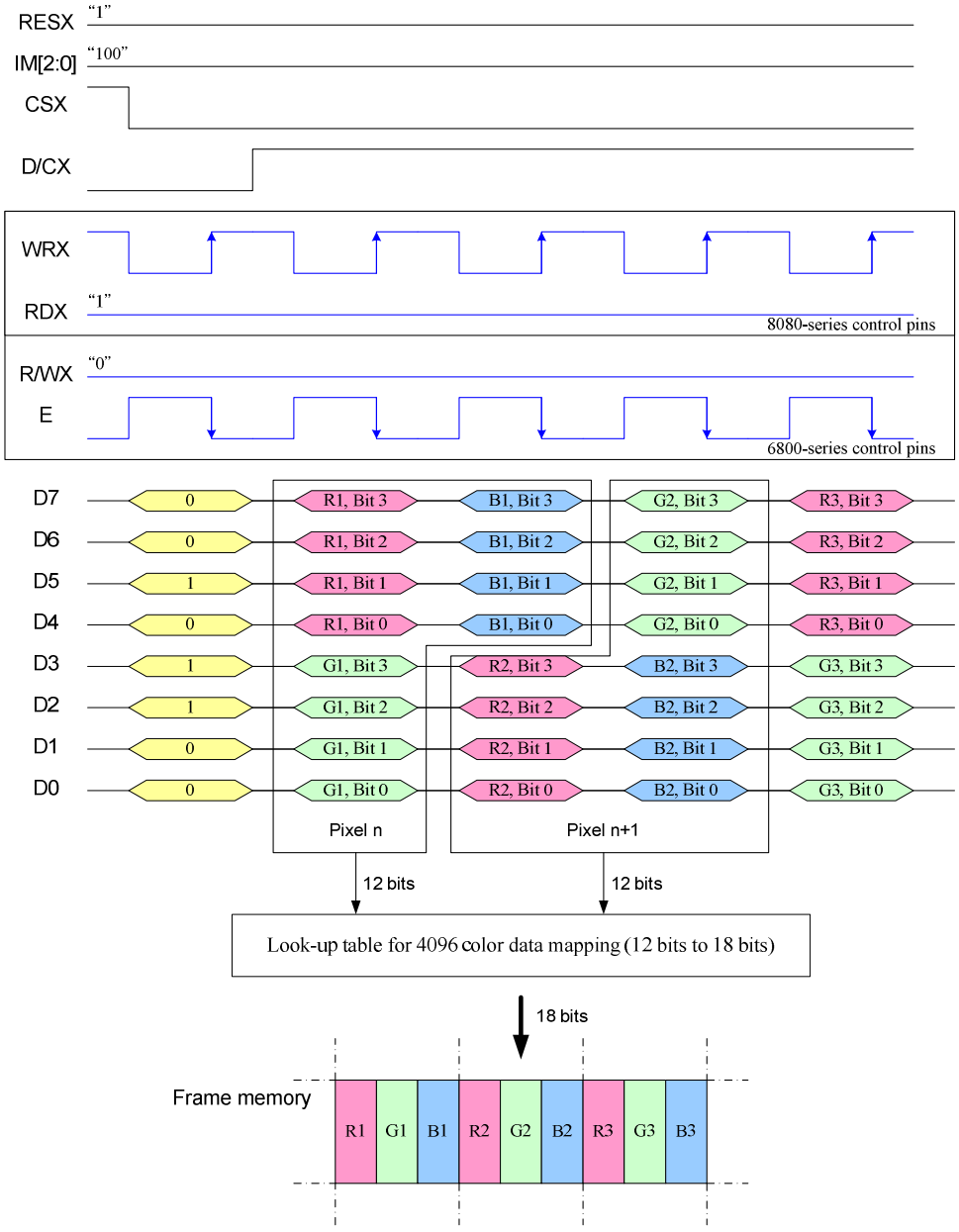

Note1. The data order is as follows, MSB=D7, LSB=D0 and picture data is MSB=Bit 3, LSB=Bit 0 for Red, Green and Blue data.
Note 2. 3-time transfer is used to transmit 1 pixel data with the 12-bit color depth information.
Note 3. ‘-‘ = Don't care - Can be set to '0' or '1'

9.8.1.2 8-bit data bus for 16-bit/pixel (RGB 5-6-5-bit input), 65K-Colors, 3AH= “05h”

There is 1 pixel (3 sub-pixels) per 2-bytes.

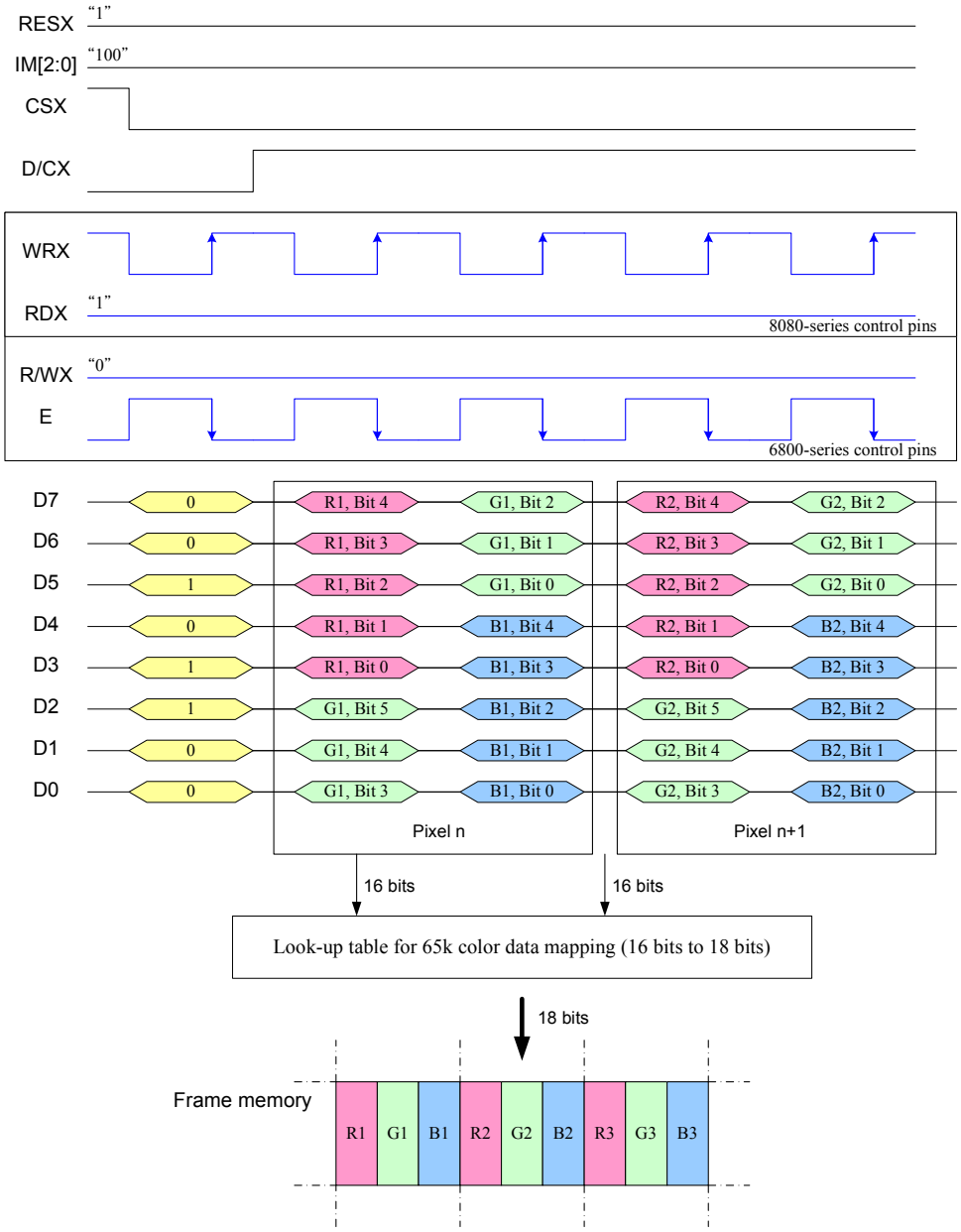

Note1. The data order is as follows, MSB=D7, LSB=D0 and picture data is MSB=Bit 5, LSB=Bit 0 for Green and MSB=Bit 4, LSB=Bit 0 for Red and Blue data.
Note 2.2-times transfer is used to transmit 1 pixel data with the 16-bit color depth information.
Note 3. ‘-‘ = Don't care - Can be set to '0' or '1'

9.8.1.3 8-bit data bus for 18-bit/pixel (RGB 6-6-6-bit input), 262K-Colors, 3AH= “06h”

There is 1 pixel (3 sub-pixels) per 3-bytes.

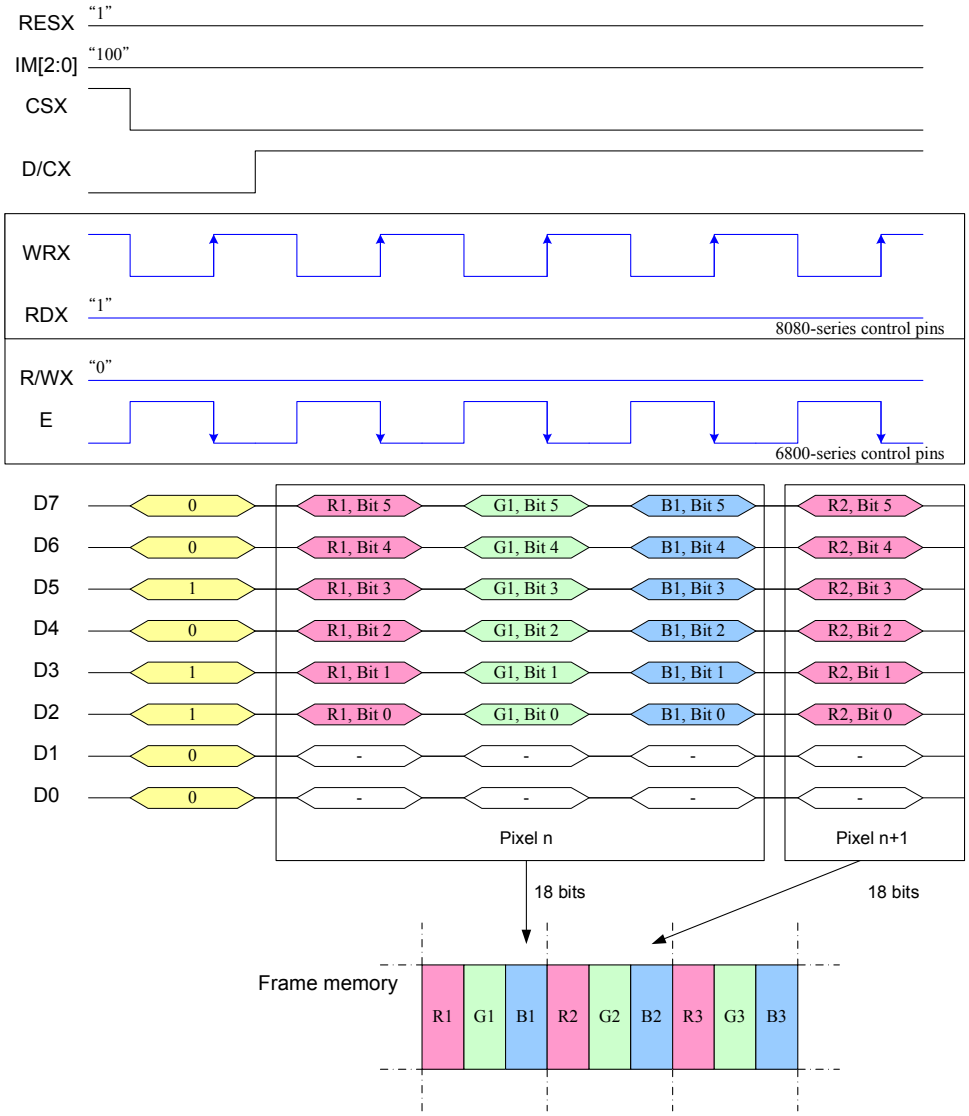

Note1. The data order is as follows, MSB=D7, LSB=D0 and picture data is MSB=Bit 5, LSB=Bit 0 for Red, Green and Blue data.
Note 2.3-times transfer is used to transmit 1 pixel data with the 18-bit color depth information.
Note 3. ‘-‘ = Don't care - Can be set to '0' or '1'

9.8.2 16-Bit Parallel Interface (IM2,IM1, IM0= “101”)

Different display data formats are available for three colors depth supported by listed below.
- 4k colors, RGB 4,4,4-bit input
- 65k colors, RGB 5,6,5-bit input
- 262k colors, RGB 6,6,6-bit input

9.8.2.1 16-bit data bus for 12-bit/pixel (RGB 4-4-4-bit input), 4K-Colors, 3AH= “03h”

There is 1 pixel (3 sub-pixels) per 1 bytes, 12-bit/pixel.

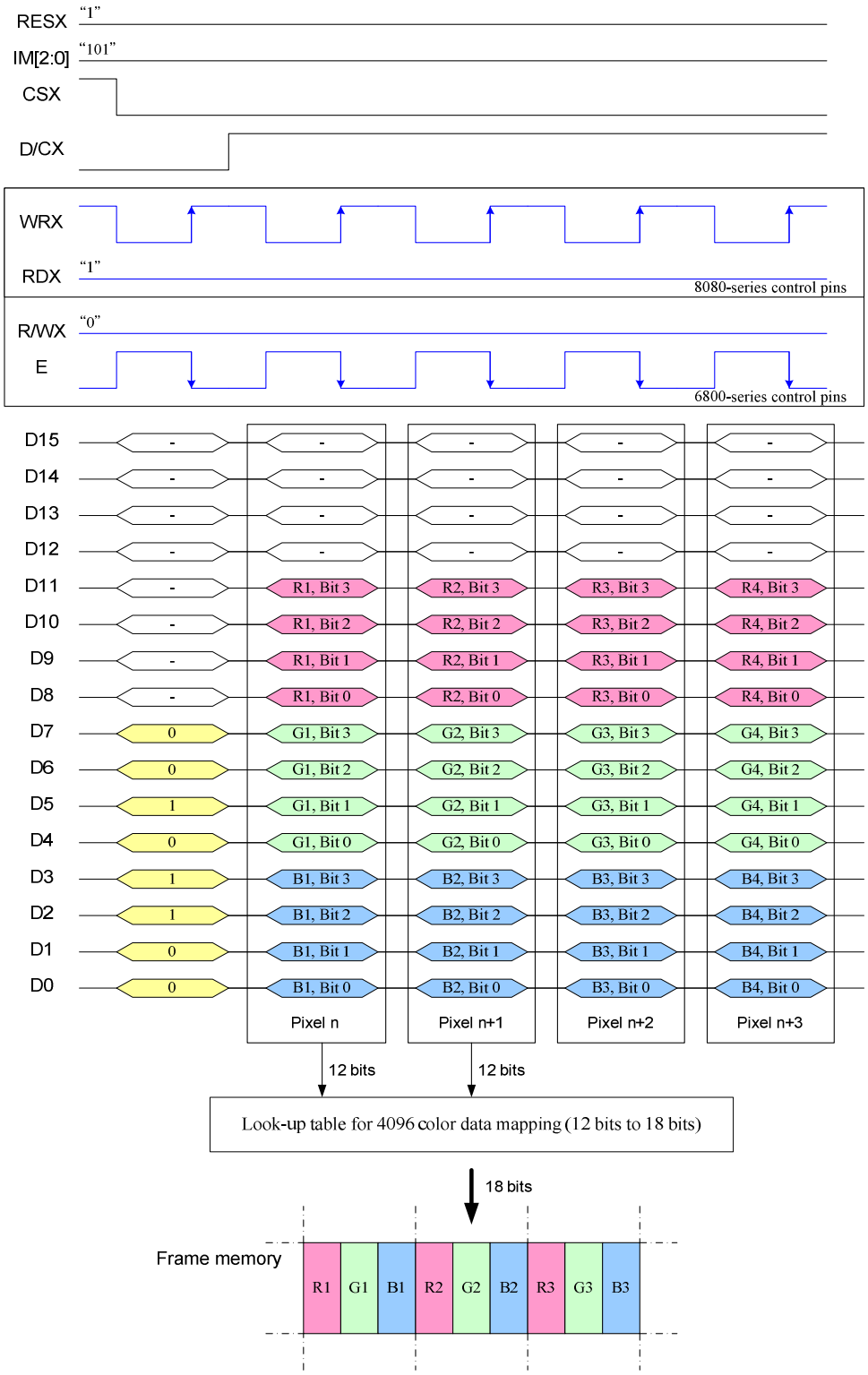

Note1. The data order is as follows, MSB=D11, LSB=D0 and picture data is MSB=Bit 3, LSB=Bit 0 for Red, Green and Blue data.
Note 2.1-times transfer (D11 to D0) is used to transmit 1 pixel data with the 12-bit color depth information.

9.8.2.2 16-bit data bus for 16-bit/pixel (RGB 5-6-5-bit input), 65K-Colors, 3AH= “05h”

There is 1 pixel (3 sub-pixels) per 1 bytes, 16-bit/pixel.

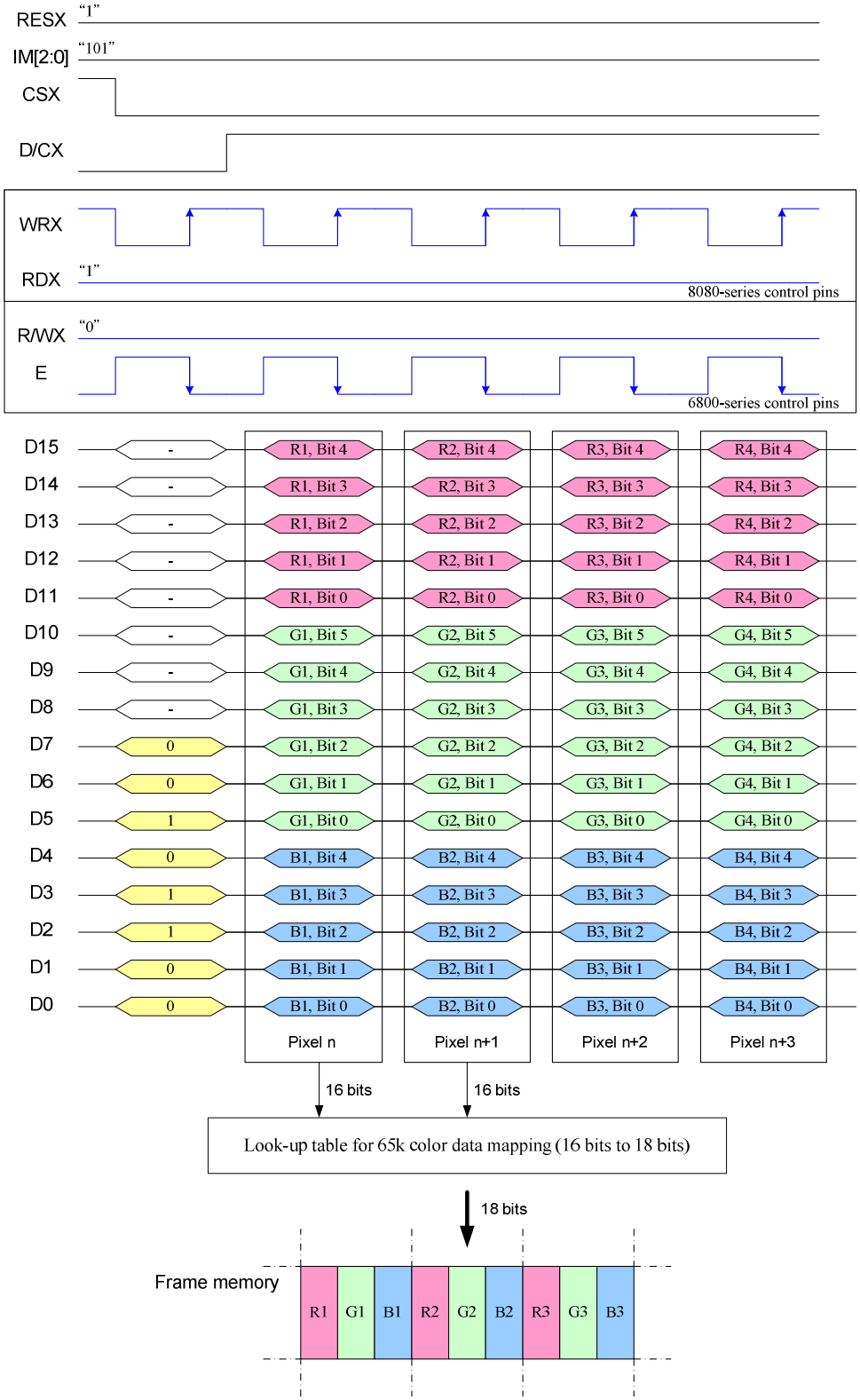

Note1. The data order is as follows, MSB=D15, LSB=D0 and picture data is MSB=Bit 5, LSB=Bit 0 for Green, and MSB=Bit 4, LSB=Bit 0 for Red and Blue data.

Note 2.1-times transfer (D15 to D0) is used to transmit 1 pixel data with the 16-bit color depth information.

Note 3. ‘-‘ = Don't care - Can be set to '0' or '1'

9.8.2.3 16-bit data bus for 18-bit/pixel (RGB 6-6-6-bit input), 262K-Colors, 3AH= “06h”

There are 2 pixel (6 sub-pixels) per 3 bytes, 18-bit/pixel.

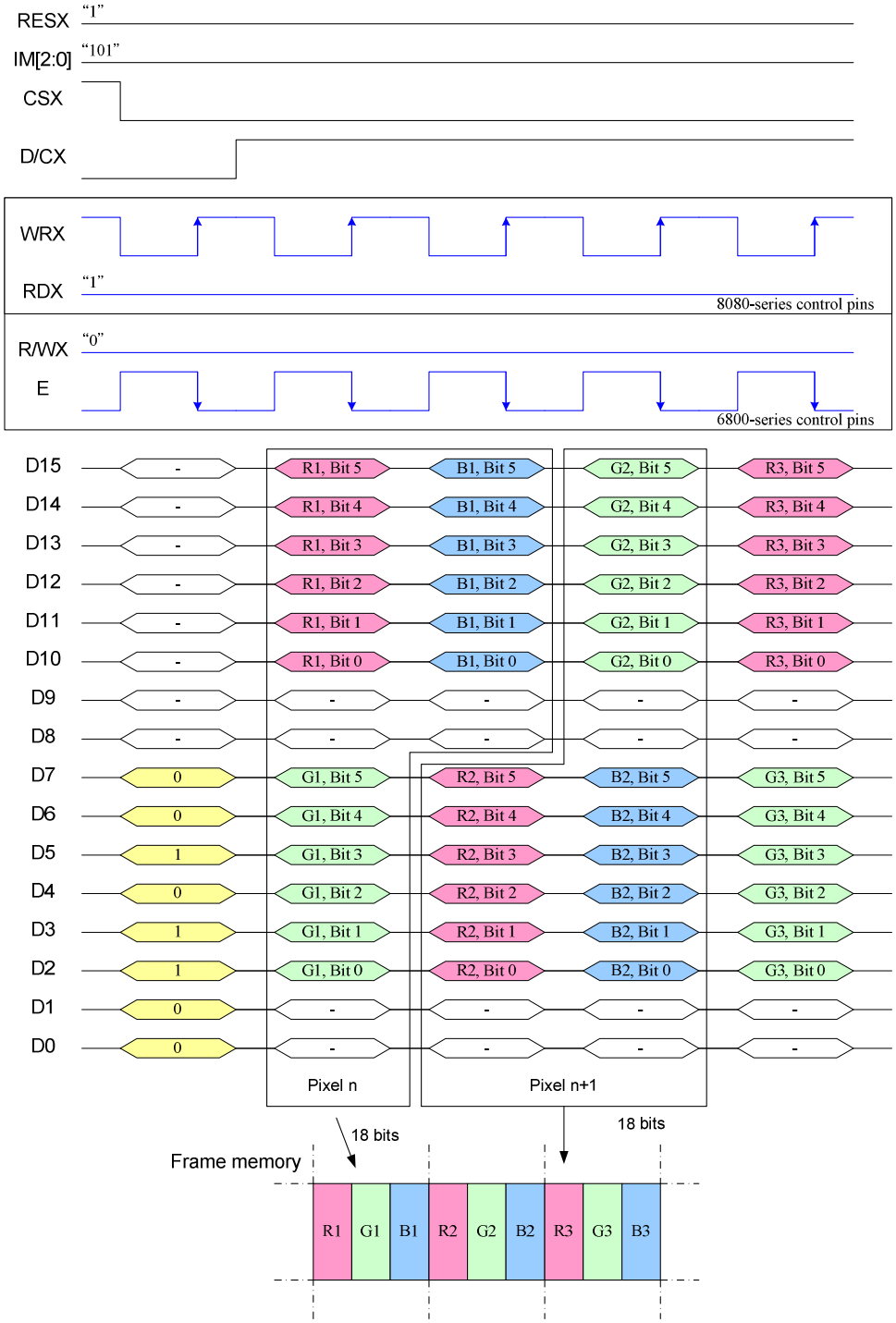

Note1. The data order is as follows, MSB=D15, LSB=D0 and picture data is MSB=Bits 5, LSB=Bit 0 for Red, Green and Blue data.
Note 2.3-times transfer is used to transmit 1 pixel data with the 18-bit color depth information.
Note 3. ‘-‘ = Don't care - Can be set to '0' or '1'

9.8.3 9-Bit Parallel Interface (IM2, IM1, IM0=“110”)

Different display data formats are available for three colors depth supported by listed below.
- 262k colors, RGB 6,6,6-bit input

9.8.3.1 Write 9-bit data for RGB 6-6-6-bit input (262k-color)

There are 1 pixel (6 sub-pixels) per 3 bytes, 18-bit/pixel.

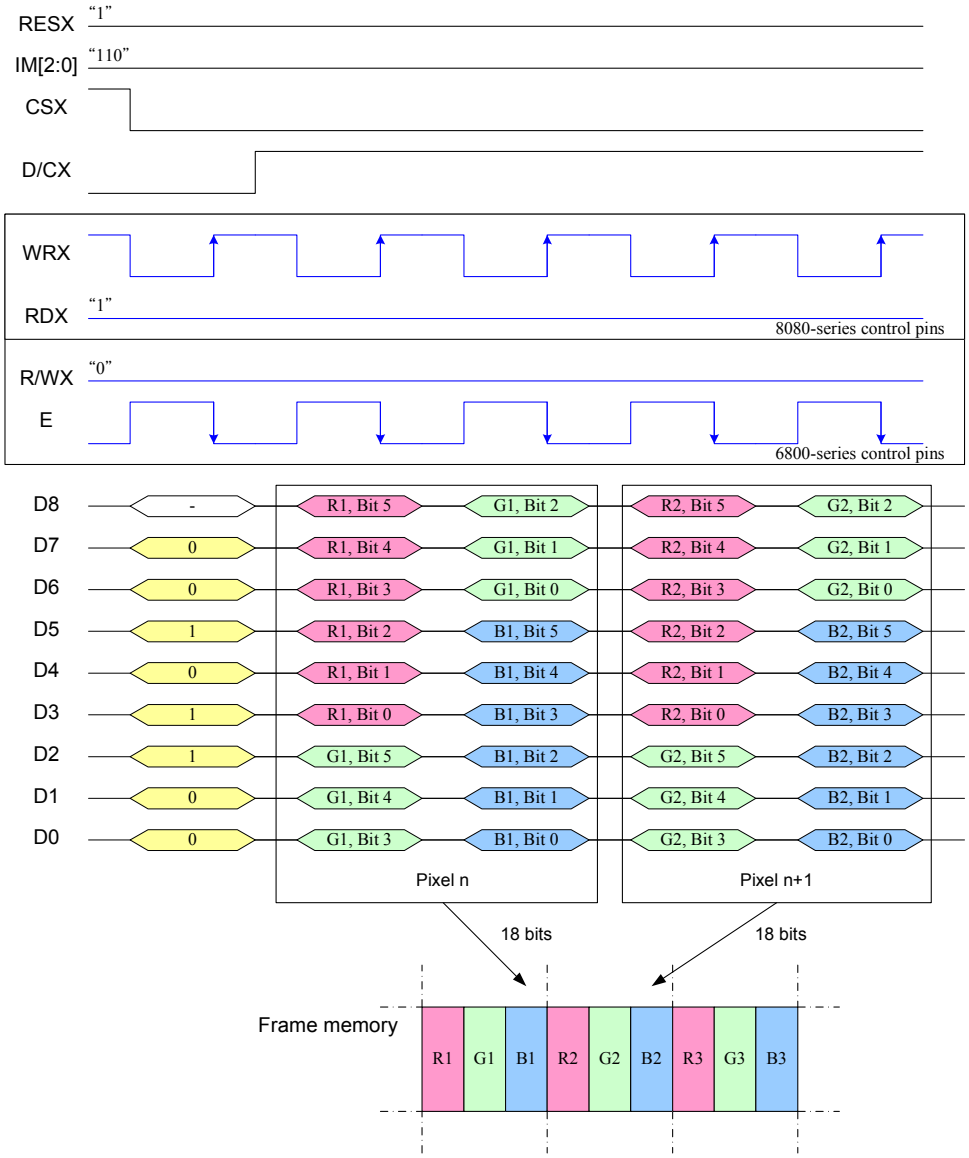

Note1. The data order is as follows, MSB=D8, LSB=D0 and picture data is MSB=Bit 5, LSB=Bit 0 for Red, Green and Blue data.
Note 2.3-times transfer is used to transmit 1 pixel data with the 18-bit color depth information.
Note 3. ‘-‘ = Don't care - Can be set to '0' or '1'

9.8.4 18-Bit Parallel Interface (IM2, IM1, IM0="111")

Different display data formats are available for three colors depth supported by listed below.
- 4k colors, RGB 4,4,4-bit input
- 65k colors, RGB 5,6,5-bit input
- 262k colors, RGB 6,6,6-bit input.

9.8.4.1 18-bit data bus for 12-bit/pixel (RGB 4-4-4-bit input), 4K-Colors, 3AH="03h"

There are 1 pixel (3 sub-pixels) per 1 byte, 12-bit/pixel.

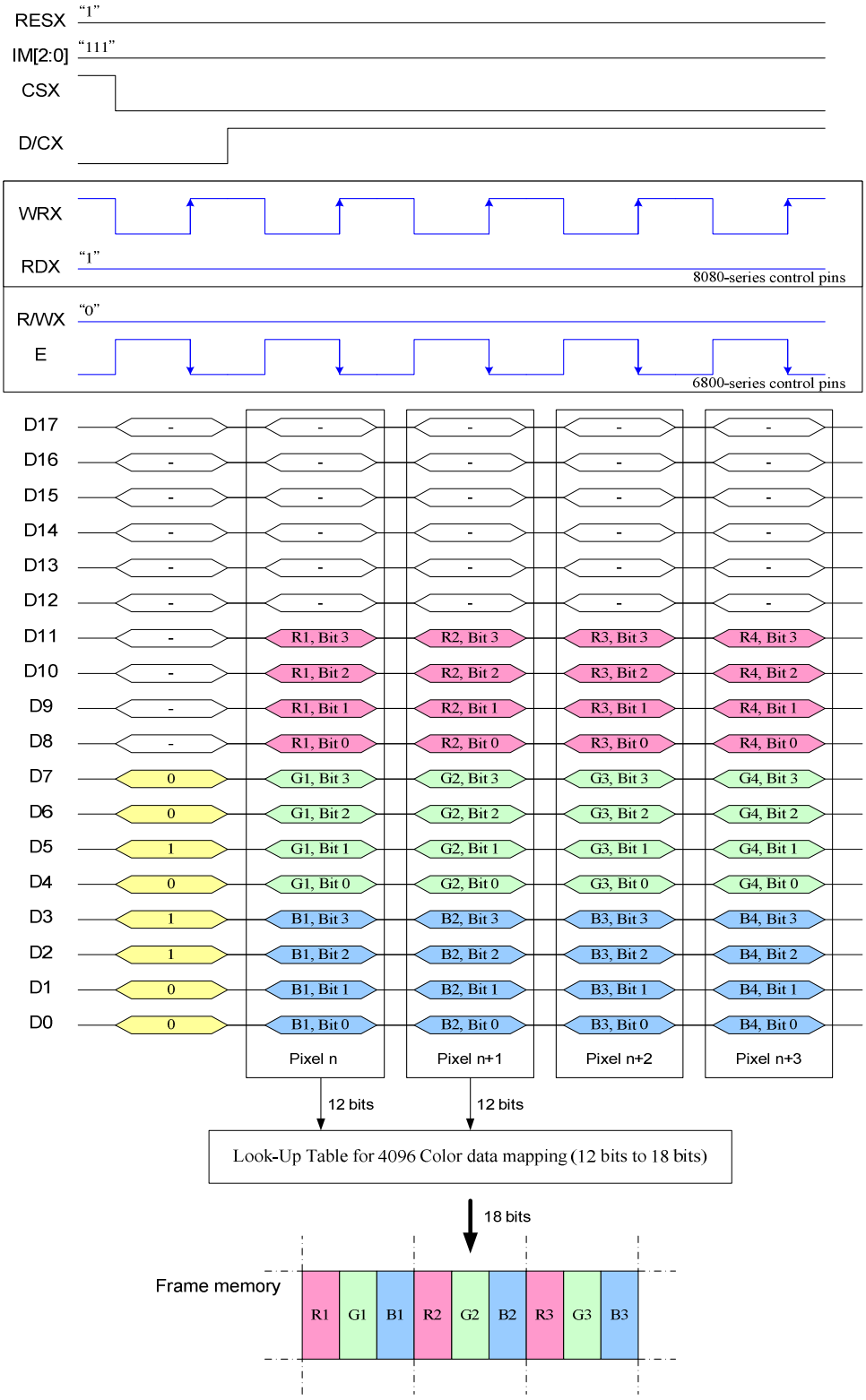

Note1. The data order is as follows, MSB=D11, LSB=D0 and picture data is MSB=Bit 3, LSB=Bit 0 for Red, Green and Blue data.
Note 2.1-times transfer is used to transmit 1 pixel data with the 12-bit color depth information.

9.8.4.2 18-bit data bus for 16-bit/pixel (RGB 5-6-5-bit input), 65K-Colors, 3AH="05h"

There are 1 pixel (3 sub-pixels) per 1 byte, 16-bit/pixel.

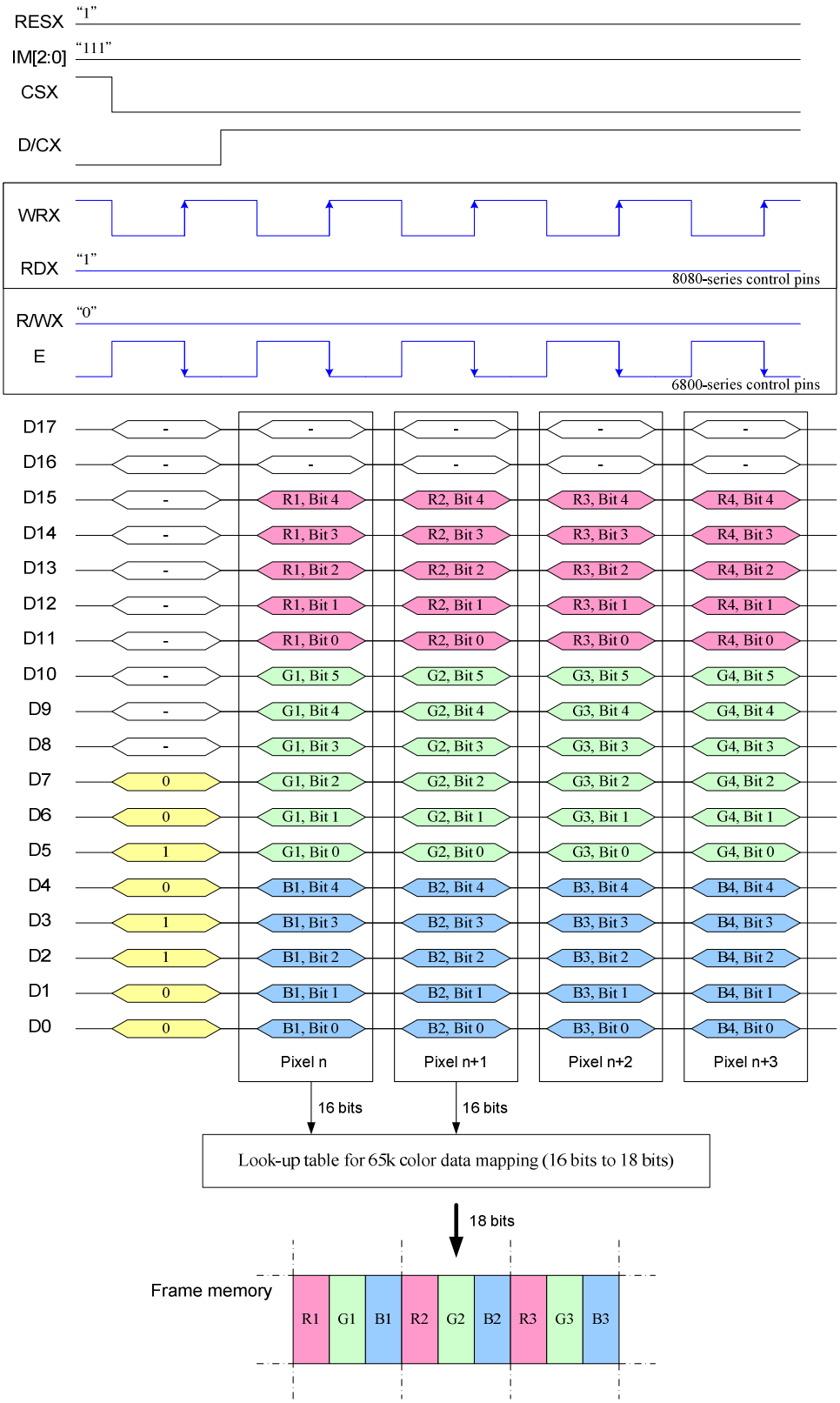

Note1. The data order is as follows, MSB=D15, LSB=D0 and picture data is MSB=Bit 5, LSB=Bit 0 for Green, and MSB=Bit 4, LSB=Bit 0 for Red and Blue data.

Note 2.1-time transfer is used to transmit 1 pixel data with the 16-bit color depth information.

9.8.4.3 18-bit data bus for 18-bit/pixel (RGB 6-6-6-bit input), 262K-Colors, 3AH="06h"

There are 1 pixel (3 sub-pixels) per 1 bytes, 18-bit/pixel.

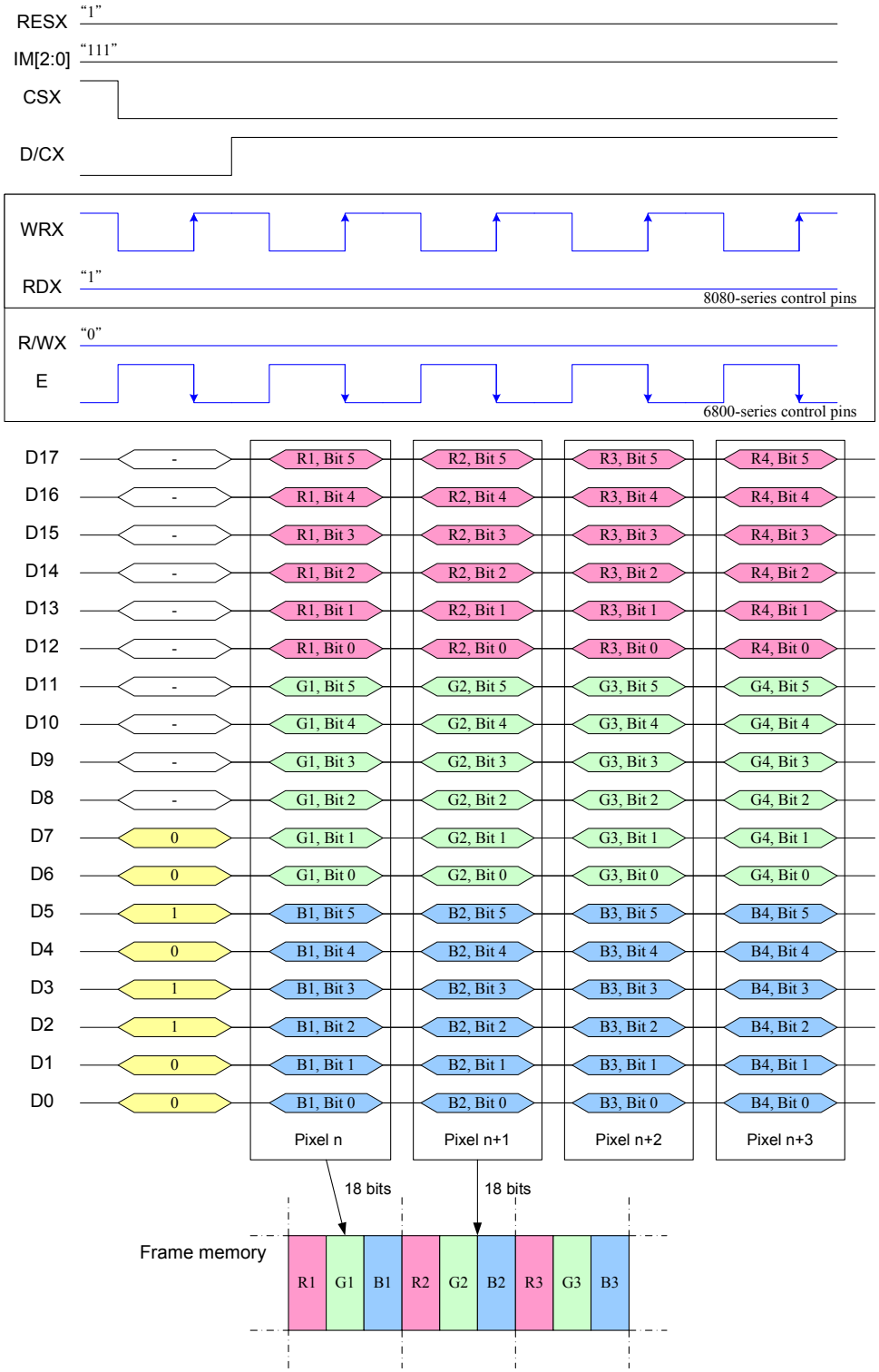

Note1. The data order is as follows, MSB=D17, LSB=D0 and picture data is MSB=Bit 5, LSB=Bit 0 for Read, Green and Blue data.
Note 2.1-times transfer (D17o D0) is used to transmit 1 pixel data with the 18-bit color depth information.

9.8.5 3-line serial Interface

Different display data formats are available for three colors depth supported by the LCM listed below.
4k colors, RGB 4-4-4-bit input
65k colors, RGB 5-6-5-bit input
262k colors, RGB 6-6-6-bit input

9.8.5.1 Write data for 12-bit/pixel (RGB 4-4-4-bit input), 4K-Colors, 3AH="03h"

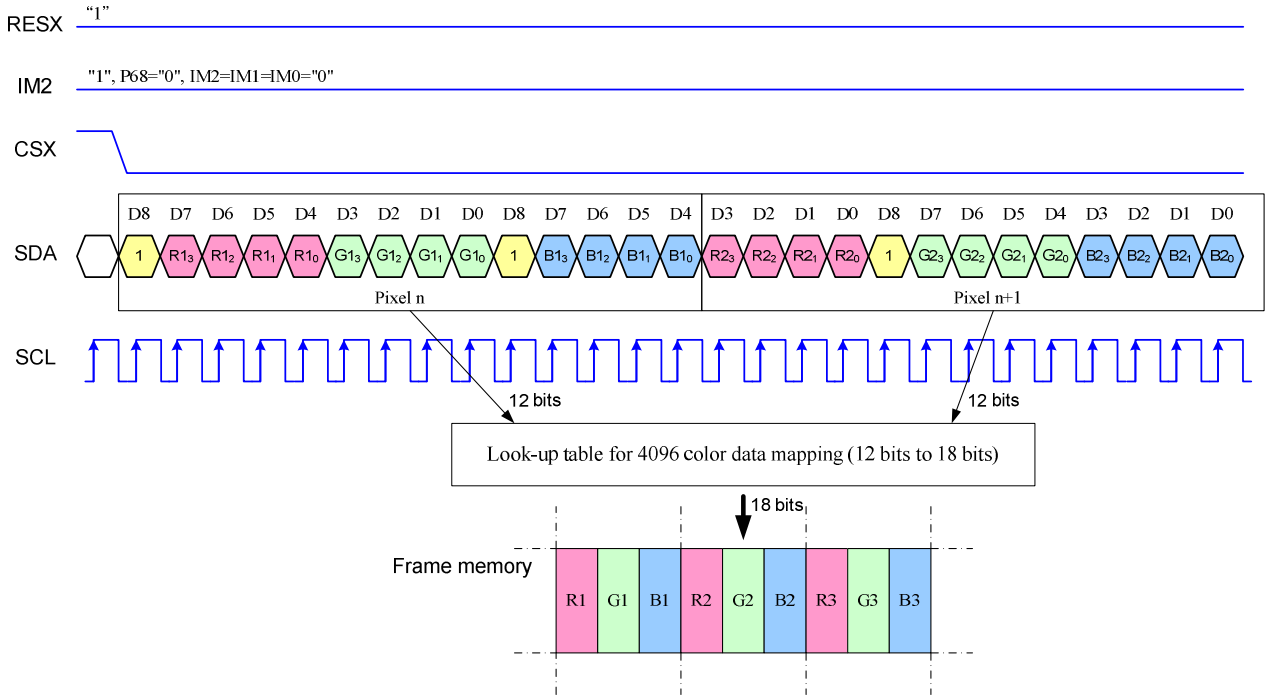

Note 1. pixel data with the 12-bit color depth information
Note 2. The most significant bits are: Rx3, Gx3 and Bx3
Note 3. The least significant bits are: Rx0, Gx0 and Bx0

9.8.5.2 Write data for 16-bit/pixel (RGB 5-6-5-bit input), 65K-Colors, 3AH="05h"

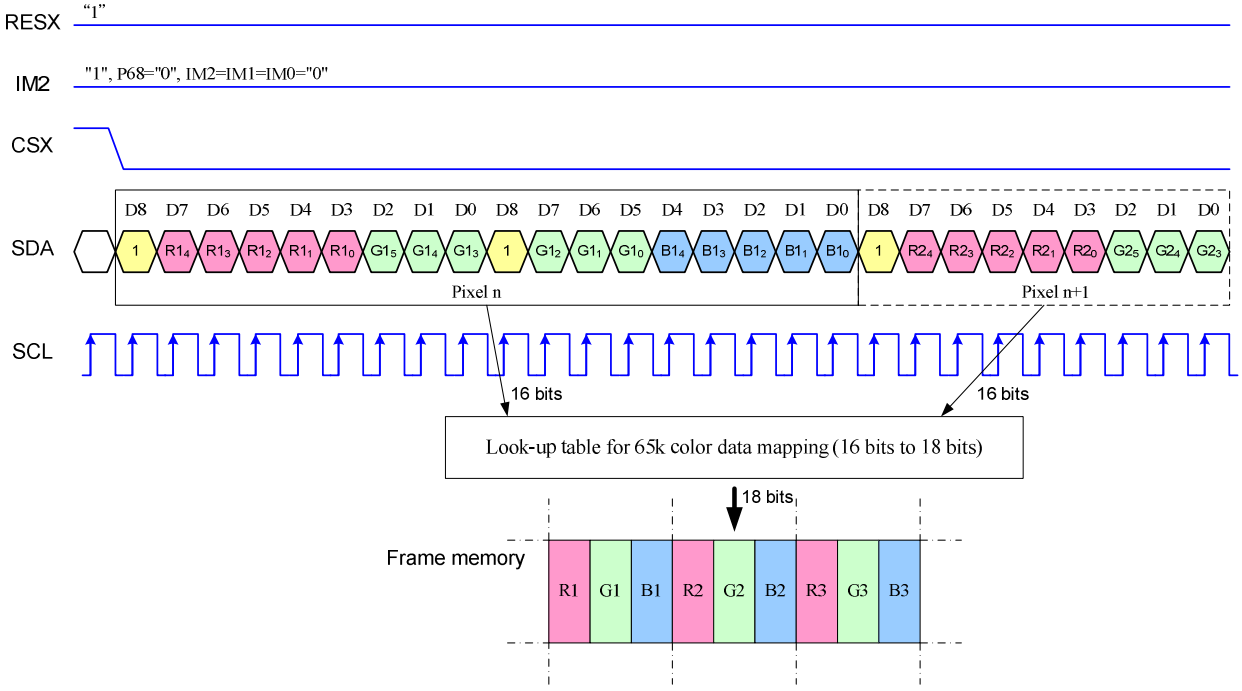

Note 1. pixel data with the 16-bit color depth information
Note 2. The most significant bits are: Rx4, Gx5 and Bx4
Note 3. The least significant bits are: Rx0, Gx0 and Bx0

9.8.5.3 Write data for 18-bit/pixel (RGB 6-6-6-bit input), 262K-Colors, 3AH="06h"

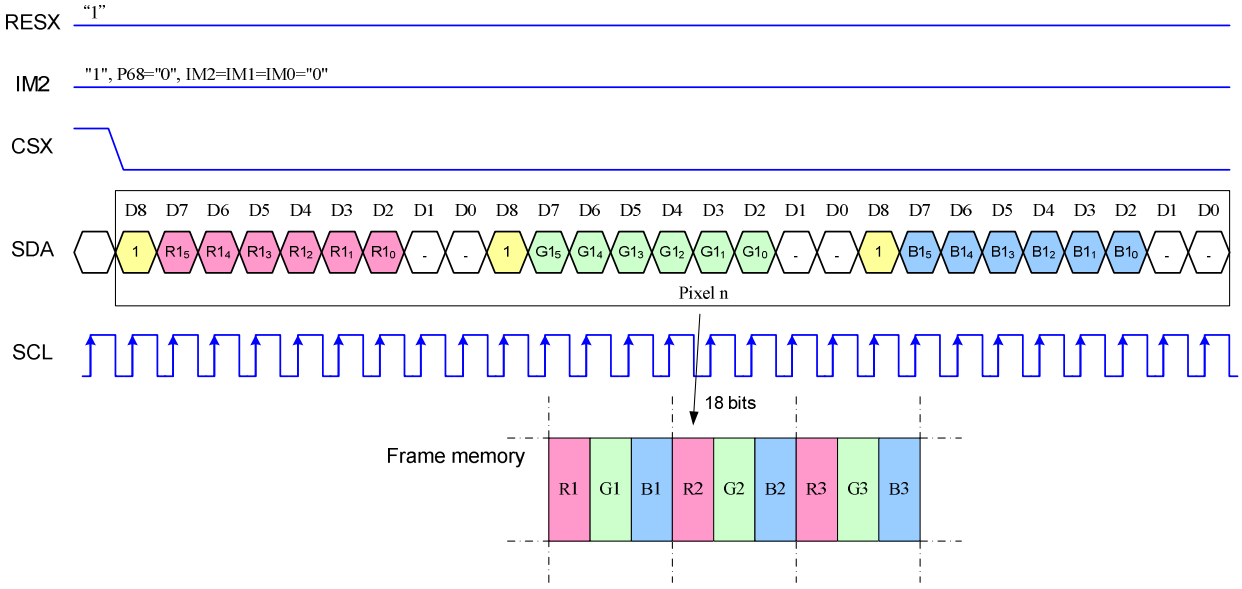

Note 1. pixel data with the 18-bit color depth information
Note 2. The most significant bits are: Rx5, Gx5 and Bx5
Note 3. The least significant bits are: Rx0, Gx0 and Bx0

9.8.6 4-line serial Interface

Different display data formats are available for three colors depth supported by the LCM listed below.
4k colors, RGB 4-4-4-bit input
65k colors, RGB 5-6-5-bit input
262k colors, RGB 6-6-6-bit input

9.8.6.1 Write data for 12-bit/pixel (RGB 4-4-4-bit input), 4K-Colors, 3AH="03h"

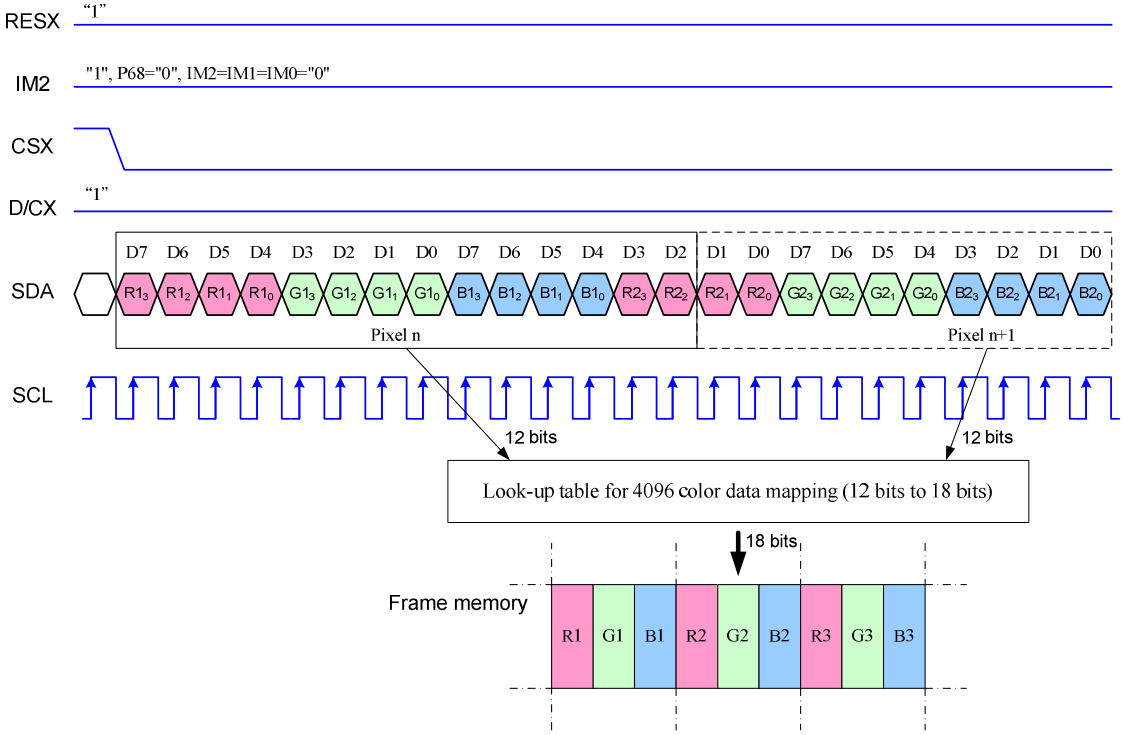

Note 1. pixel data with the 12-bit color depth information
Note 2. The most significant bits are: Rx3, Gx3 and Bx3
Note 3. The least significant bits are: Rx0, Gx0 and Bx0

9.8.6.2 Write data for 16-bit/pixel (RGB 5-6-5-bit input), 65K-Colors, 3AH="05h"

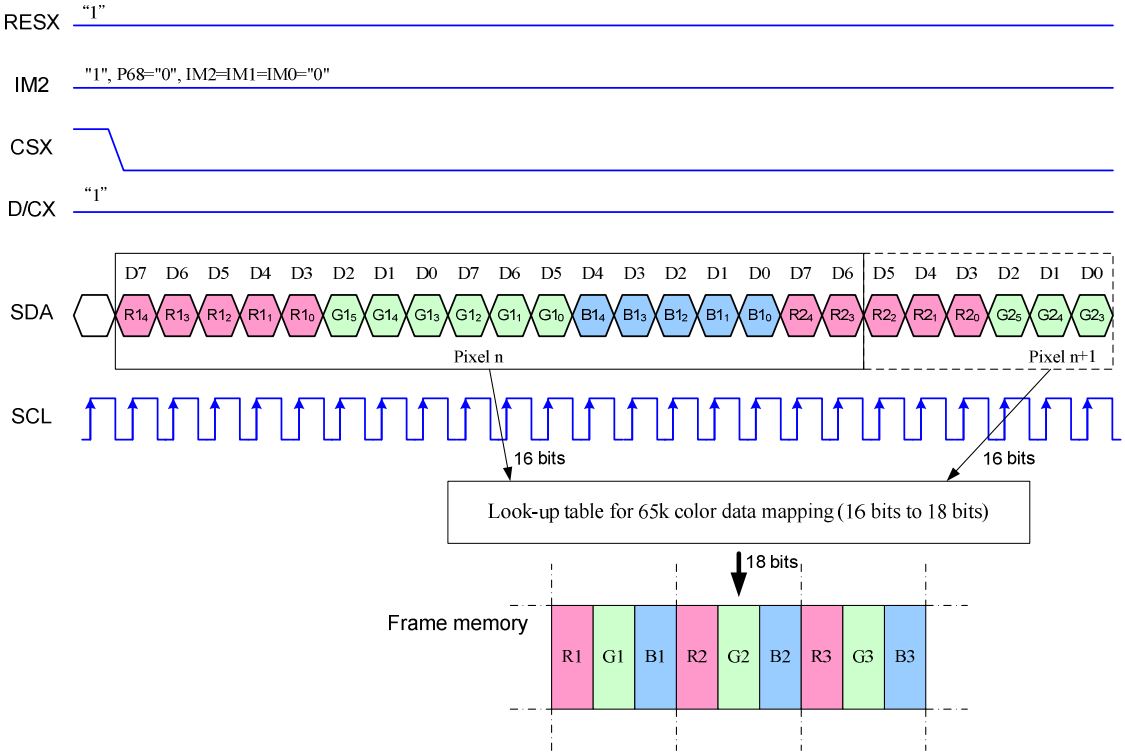

Note 1. pixel data with the 16-bit color depth information
Note 2. The most significant bits are: Rx4, Gx5 and Bx4
Note 3. The least significant bits are: Rx0, Gx0 and Bx0

9.8.6.3 Write data for 18-bit/pixel (RGB 6-6-6-bit input), 262K-Colors, 3AH="06h"

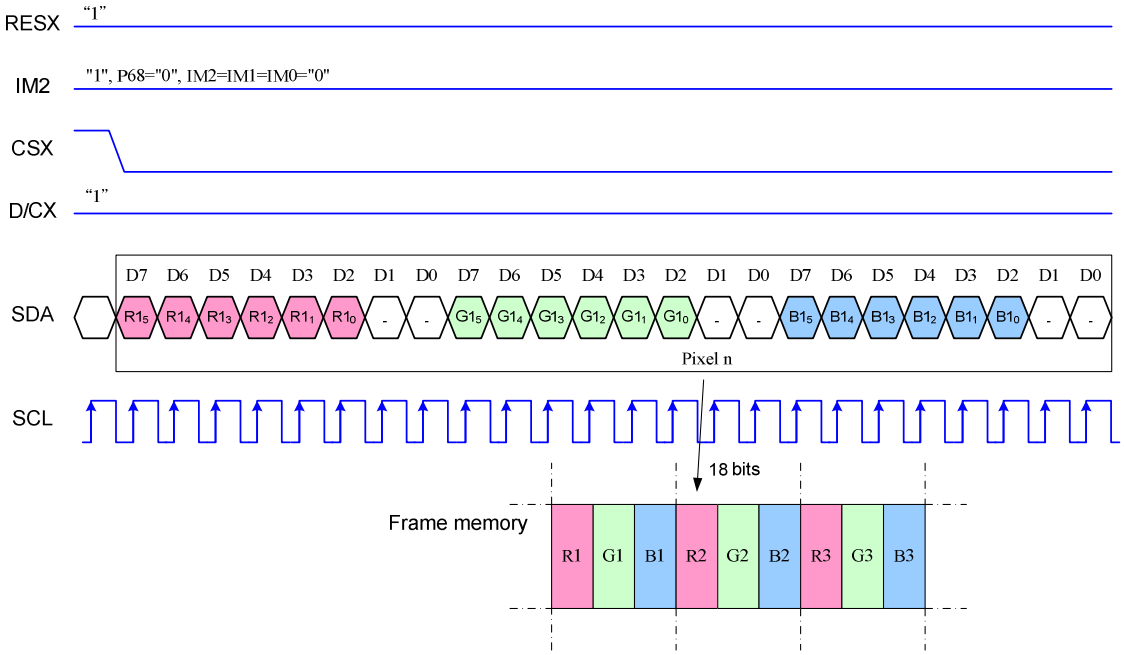

Note 1. pixel data with the 18-bit color depth information
Note 2. The most significant bits are: Rx5, Gx5 and Bx5
Note 3. The least significant bits are: Rx0, Gx0 and Bx0

9.9 RGB interface

9.9.1 General Description

The module uses 6, 16 and 18-bit parallel RGB interface which includes: VS, HS, DE, PCLK, D[17:0]. The interface is activated after Power-On sequence (See section Power-On/Off Sequence)

Pixel clock (PCLK) is running all the time without stopping and it is used to enter VS, HS, DE and D[17:0] states at the rising edge of the PCLK. The PCLK cannot be used as continues internal clock for other functions of the display module e.g. Sleep-In mode etc.

Vertical synchronization (VS) is used to tell the driver when a new frame of the display is beginning. This is negative ('0', low) active and its state is read by the driver at the rising edge of he PCLK signal.

Horizontal synchronization (HS) is used to tell the driver when a new line of the frame is beginning. This is negative ('0', low) active and its state is read by the driver at the rising edge of the PCLK signal.

Data Enable (DE) is used to tell the driver when the RGB information will be transferred ti the driver. This is a positive ('1', high) active and its state is read by the driver at the rising edge of the PCLK signal.

D[17:0] (18-bit: R5-R0, G5-G0 and B5-B0; 16-bit: R4-R0, G5-G0 and B4-B0) are used to tell what is the information of the image that is transferred on the display (When DE='1' and at the rising edge of PCLK). D[17:0] can be '0' (low) or '1' (high). These lines are read by the driver at the rising edge of the PCLK signal.

The PCLK cycle is described in the following figure.

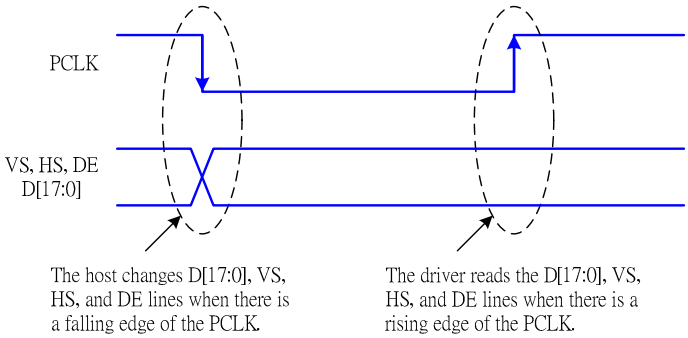

Fig. 9.9.1 PCLK cycle

Note: PCLK is an unsynchronized signal (It can be stopped).

9.9.2 General timing diagram

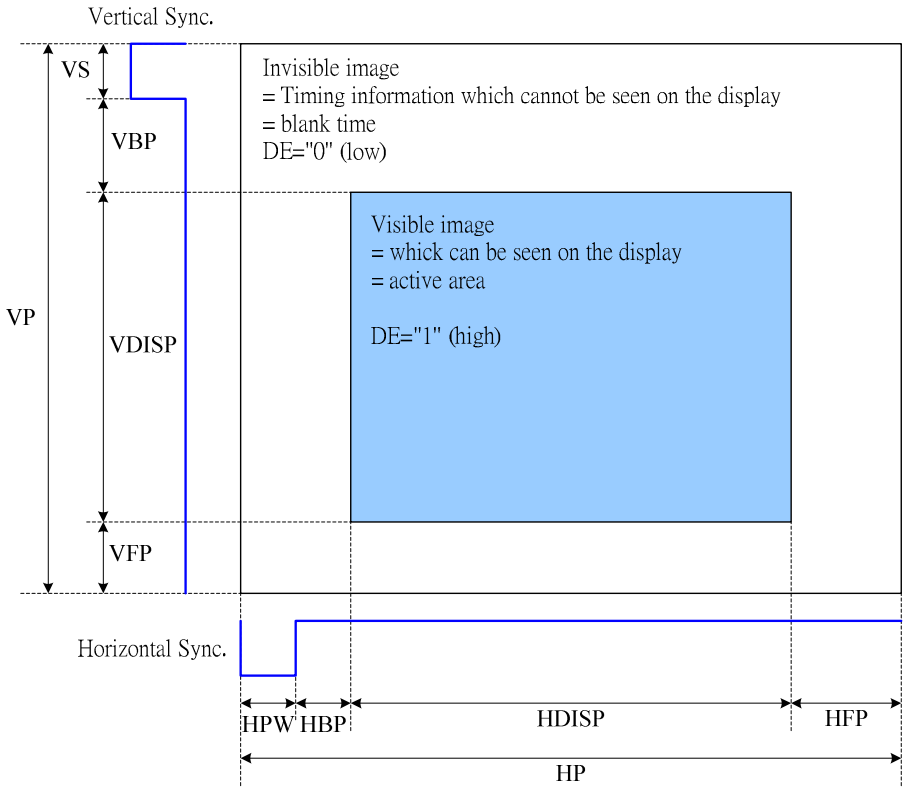

Fig. 9.9.2 RGB general timing diagram

The image information must be correct on the display, when the timings conforms the spec of the RGB interface.

However, the image information can be incorrect on the display temporarily when timing is out of spec. The correct image information must be displayed automatically (by the display module) in the next frame period as the timing recovers from out of spec to within spec.

9.9.3 Updating order on display active area (normal display on + sleep out)

There are different kinds of updating orders for the display. These updating orders are controlled by H/W (SMX, SMY) and S/W (MX, MY, MV) bits.

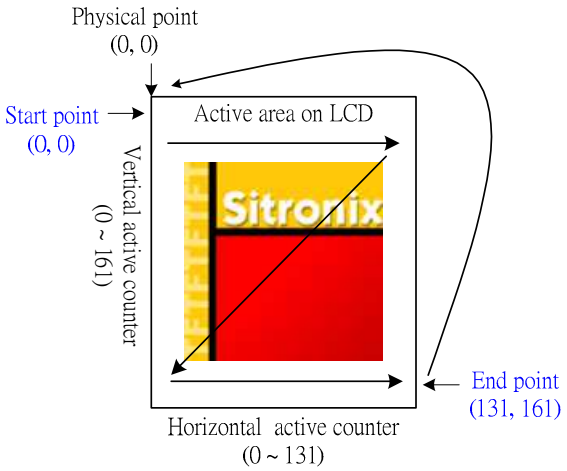

Fig. 9.9.3 Updating order when MADCTL's MX="0" and MY="0"

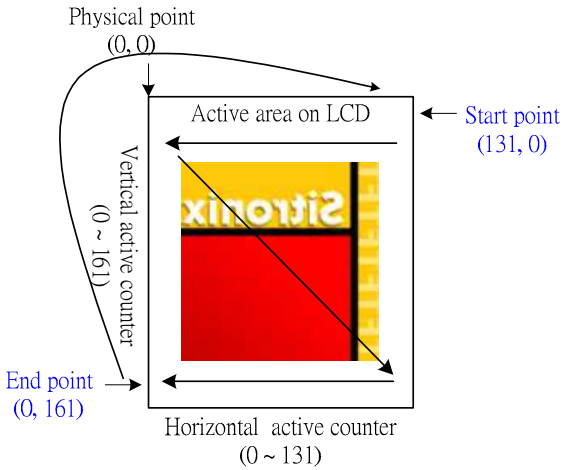

Fig. 9.9.4 Updating order when MADCTL's MX="1" and MY="0"

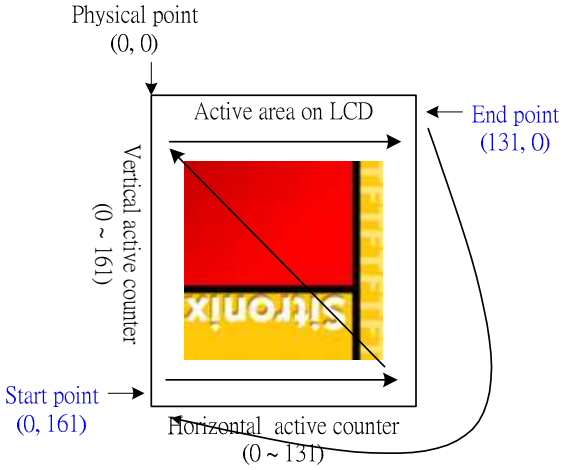

Fig. 9.9.5 Updating order when MADCTL's MX="0" and MY="1"

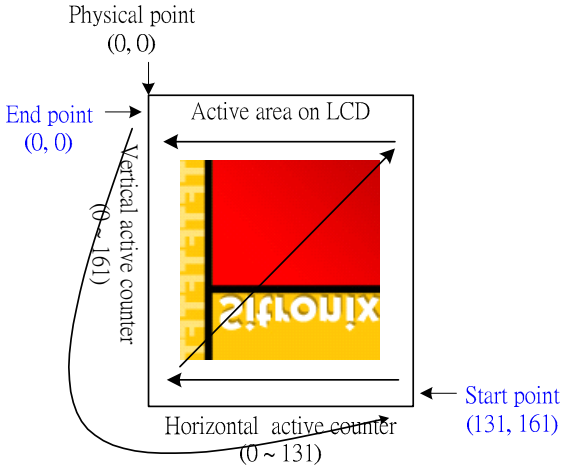

Fig. 9.9.6 Updating order when MADCTL's MX="1" and MY="1"

Table 9.9.1 Rules for updating order

Condition	Horizontal Counter	Vertical Counter
An active VS signal is received	Return to 0	Return to 0
Signal pixel information of the active area is received	Increment by 1	No change
An active HS signal between two active area lines	Return to 0	Increment by 1
The horizontal counter is larger than 239 and the vertical counter is larger than 319	Return to 0	Return to 0

Note 1. Pixel order is RGB on the display.
Note 2. Data streaming direction from the host to the display is described in the following figure.

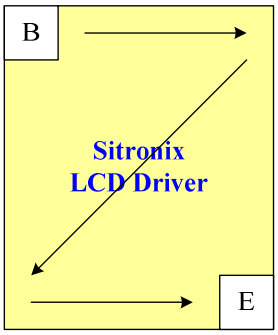

Fig. 9.9.3 Data streaming order for RGB interface

9.9.4 RGB Interface Bus Width set

All 4-kinds of bus width can be available in RGB interface mode (selected by COLMOD (3Ah) command for 6-bit, 16-bit and 18-bit data width)

VIPF[3:0]	D17	D16	D15	D14	D13	D12	D11	D10	D9	D8	D7	D6	D5	D4	D3	D2	D1	D0	Bus width
0101	R4	R3	R2	R1	R0	x	G5	G4	G3	G2	G1	G0	B4	B3	B2	B1	B0	x	16-bit data
0110	R5	R4	R3	R2	R1	R0	G5	G4	G3	G2	G1	G0	B5	B4	B3	B2	B1	B0	18-bit data
1110	x	x	x	x	x	x	x	x	x	x	X	x	R5	R4	R3	R2	R1	R0	6-bit data
	x	x	x	x	x	x	x	x	x	x	X	X	G5	G4	G3	G2	G1	G0	
	x	x	x	x	x	x	x	x	x	x	x	X	B5	B4	B3	B2	B1	B0	

Note 1: When VIPF[3:0]="1110", 6-bit data width of 3-times transfer is used to transmit 1 pixel data with the 18-bit color depth information.
Note 2: Only VIPF[3:0]= "0101" , "0110" and "1110" are valid on RGB I/F, Others are invalid.
Note 3. 'x' Don't care, but need to set VDDI or DGND level.

9.9.5 RGB Interface Mode Set

Table 9.9.5.1 RGB Interface Mode Setting

RGB I/F Mode	PCLK	DE	VS	HS	Video Data bus D[17:0]	Register for Blanking Porch setting	Reference clock for Display
RGB Mode 1	Used	Used	Used	Used	Used	Not Used	Internal Oscillator
RGB Mode 2	Used	Used	Used	Used	Used	Used	Internal Oscillator

There are 2-kinds of RGB mode which is selected by RCM1 & RCM0 hardware pins.

In RGB Mode 1 (RCM1, RCM0 = "10"), writing data to frame memory is done by PCLK and data bus (D[17:0]), when DE is in high state. The external synchronization signals (PCLK, VS and HS) are used for internal display signals. So, controller (host) must always transfer PCLK, VS, HS and DE signals to driver.

In RGB Mode 2 (RCM1, RCM0 = "11"), blanking porch setting of VS and HS signals are defined by RGBBPCTR (B5h) command. DE pin is used for data making. When DE pin is high, valid data is directly stored to frame memory. In the contrast, if DE pin is low the data of frame memory will keep same status.

9.9.6 RGB Interface Timing Diagram
9.9.6.1 General Timings for RGB I/F

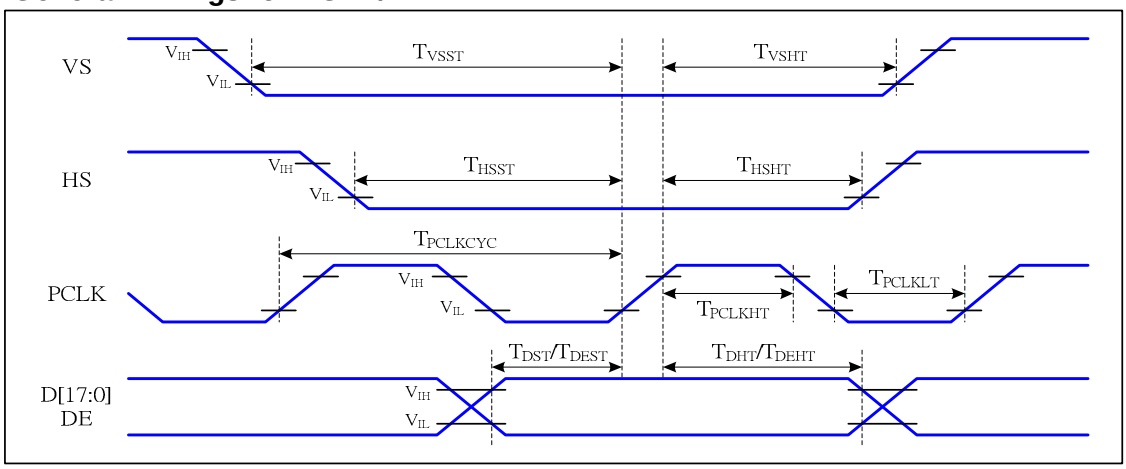

Fig. 9.9.6 General timing of RGB interface

Table 9.9.6.1 General Timing for RGB I/F

Item	Symbol	Condition	Specification			Unit
			Min	Type.	Max	
Pixel low pulse width	T_{PCLKLT}		15			
Pixel high pulse width	T_{PCLKHT}		15			
Vertical Sync. set-up time	T_{VSST}		15			ns
Vertical Sync. hold time	T_{VSSHT}		15			ns
Horizontal Sync. set-up time	T_{HSST}		15			ns
Horizontal Sync. hold time	T_{VSSHT}		15			ns
Data Enable set-up time	T_{DEST}		15			
Data Enable hold time	T_{DEHT}		15			
Data set-up time	T_{DST}		15			
Data hold time	T_{DHT}		15			

Note 1: VDDI=1.6 to 3.3V, VDD=2.5V to 3.3V, AGND=DGND=0V, Ta=-30 to 70 ℃ (to +85℃ no damage)
Note 2: The input signal rise time and fall time (tr, tf) is specified at 15 ns or less.
Note 3: Data lines can be set to "High" or "Low" during blanking time – Don't care.
Note 4: Logic high and low levels are specified as 30% and 70% of VDDI for Input signals.
Note 5: HP is multiples of eight PCLK.

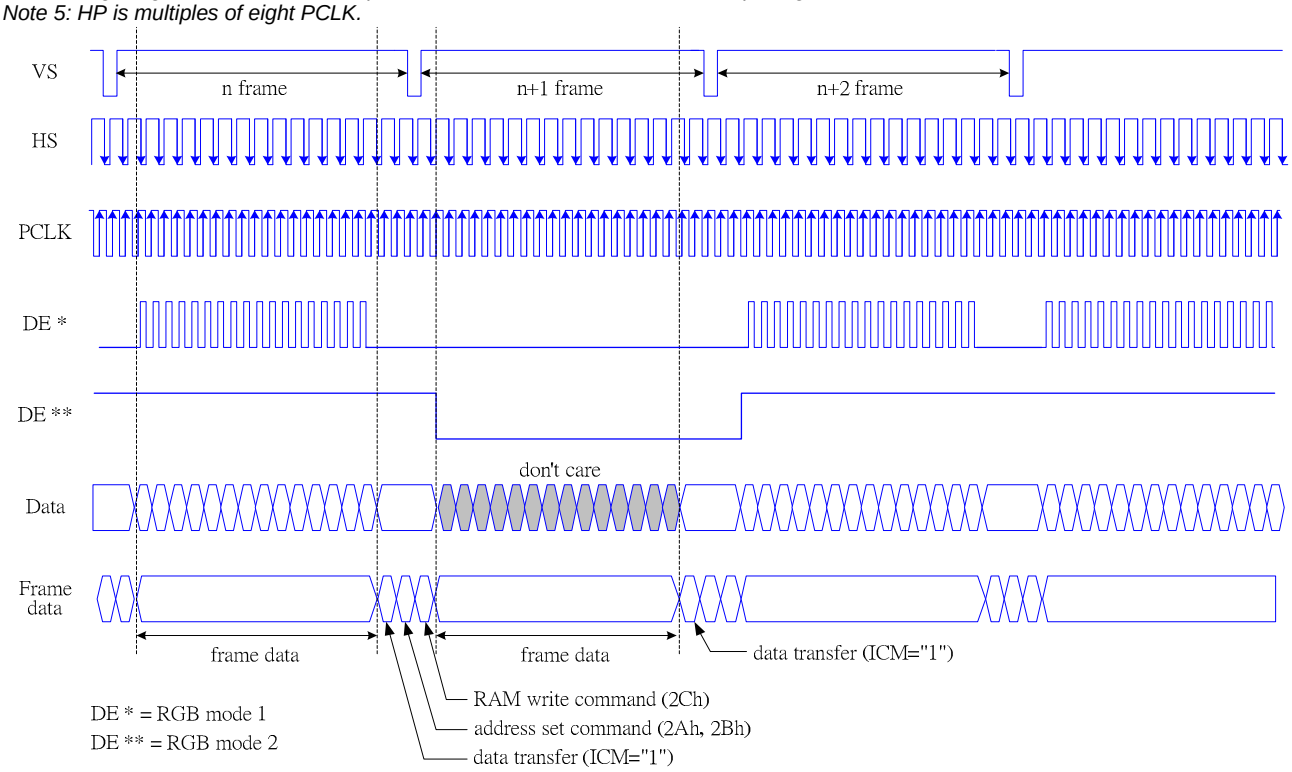

Fig. 9.9.7 RAM access via SPI interface in RGB mode

Note: DP='0', EP='0', HSP='0' and VSP='0' of RGBCTR (B0h) command.

9.9.6.2 RGB Interface Mode 1 Timing Diagram

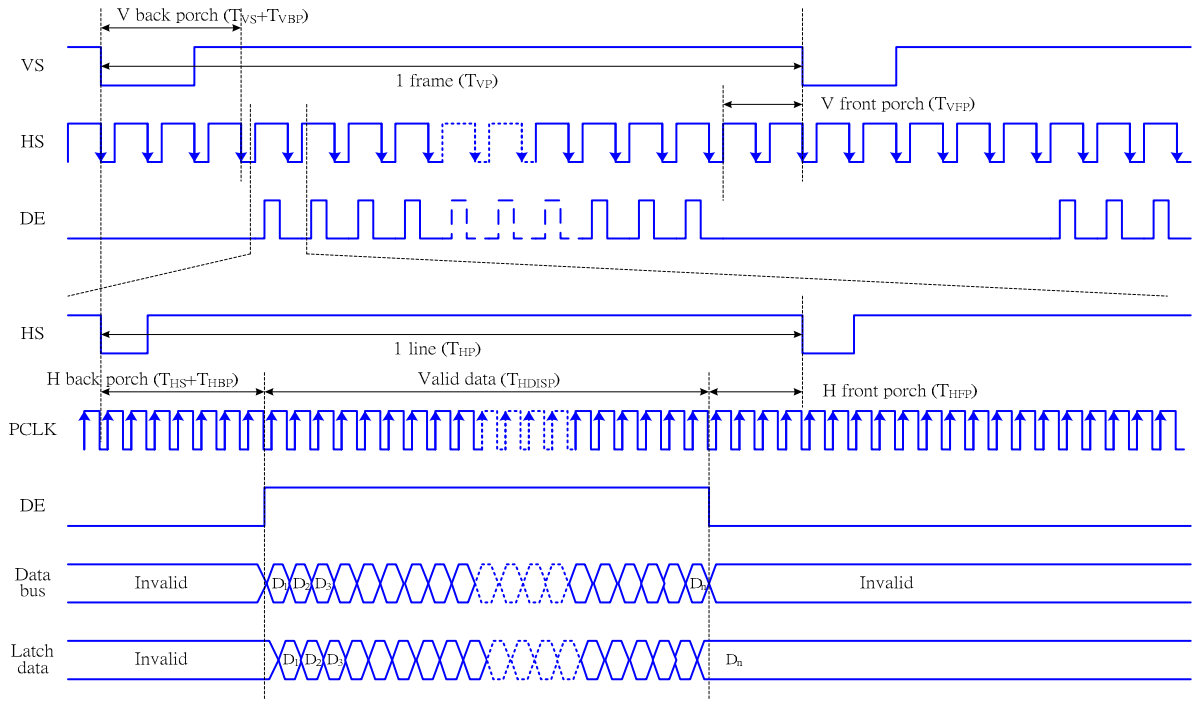

Fig. 9.9.8 RGB mode 1 timing diagram

Note: DP='0', EP='0', HSP='0' and VSP='0' of RGBCTR (B0h) command.

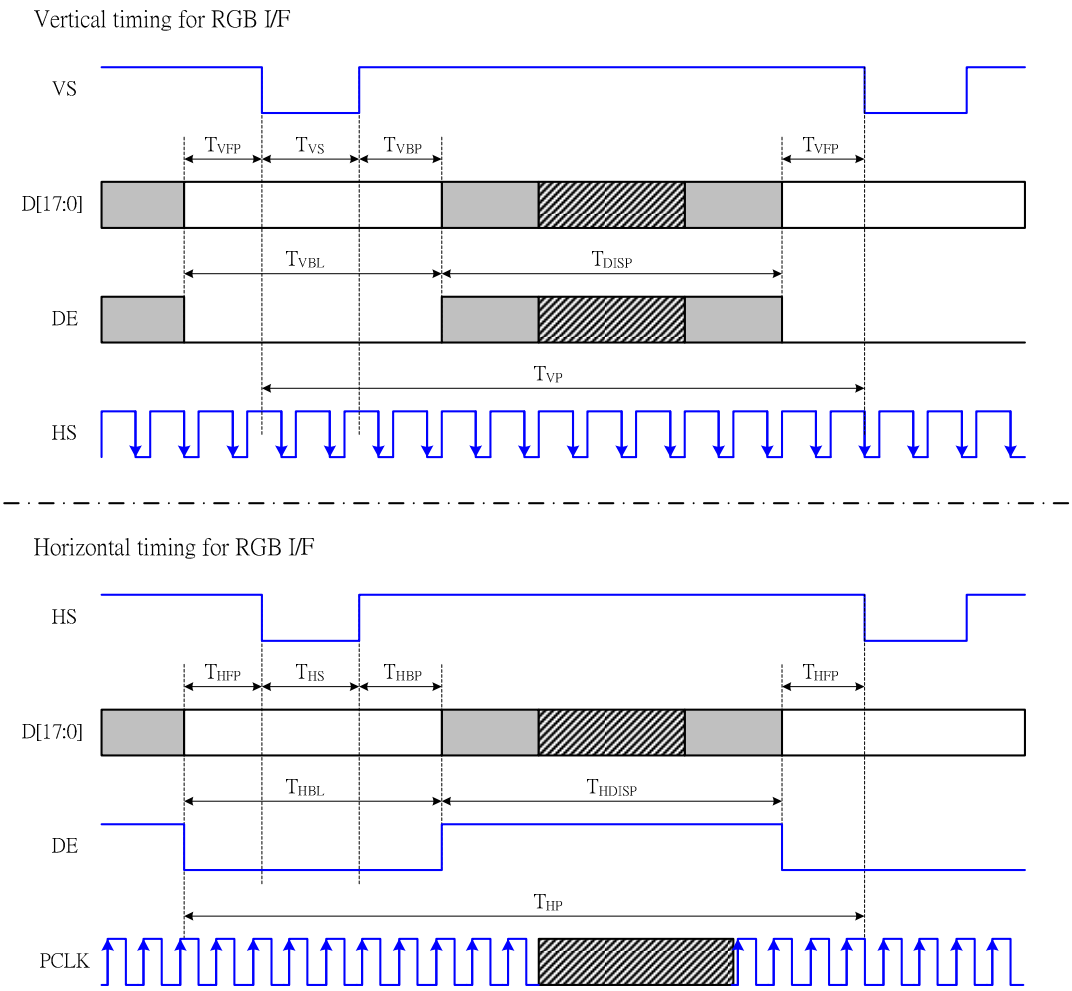

Fig. 9.9.9 Vertical and horizontal timing of RGB interface

Table 9.9.6.2 Vertical and Horizontal Timing for RGB I/F

Item	Symbol	Condition	Specification			Unit
			Min	Type.	Max	
Vertical Timing						
Vertical cycle period	T_{VP}	GM="00"&"01"	166		172	HS
Vertical low pulse width	T_{VS}		2		4	HS
Vertical front porch	T_{VFP}		2		4	HS
Vertical back porch	T_{VBP}		2		4	HS
Vertical data start line		$T_{VS} + T_{VBP}$	4		8	HS
Vertical blanking period	T_{VBL}	$T_{VS} + T_{VBP} + T_{VFP}$	6		12	HS
Vertical active area	T_{VDISP}	GM="00"&"01"		160		HS
Vertical refresh rate	T_{VRR}	Frame rate	61.75	65	68.25	Hz
Horizontal Timing						
Horizontal cycle period	T_{HP}	GM="00"&"01"	160		745	PCLK
Horizontal low pulse width	T_{HS}		2		256	PCLK
Horizontal front porch	T_{HFP}		2		256	PCLK
Horizontal back porch	T_{HBP}		2		256	PCLK
Horizontal data start point		$T_{HS} + T_{HBP}$	30		766	PCLK
Horizontal blanking period	T_{HBL}		32		768	PCLK
Horizontal active area	T_{HDISP}	GM="00"&"01"		128		PCLK
Pixel clock cycle	$T_{PCLKCYC}$	GM="00" TVRR=65Hz	100		579	ns
	$f_{PCLKCYC}$		1.7		10	MHz
	$T_{PCLKCYC}$	GM="01" TVRR=65Hz	100		610	ns
	$f_{PCLKCYC}$		1.6		10	MHz

Note 1. VDDI=1.6 to 3.3V, VDD=2.5V to 3.3V, AGND=DGND=0V, Ta=-30 to 70℃
Note 2. Data lines can be set to "High" or "Low" during blanking time – Don't care.
Note 3. HP is multiples of eight PCLK.

9.9.6.3 RGB Interface Mode 2 Timing Diagram

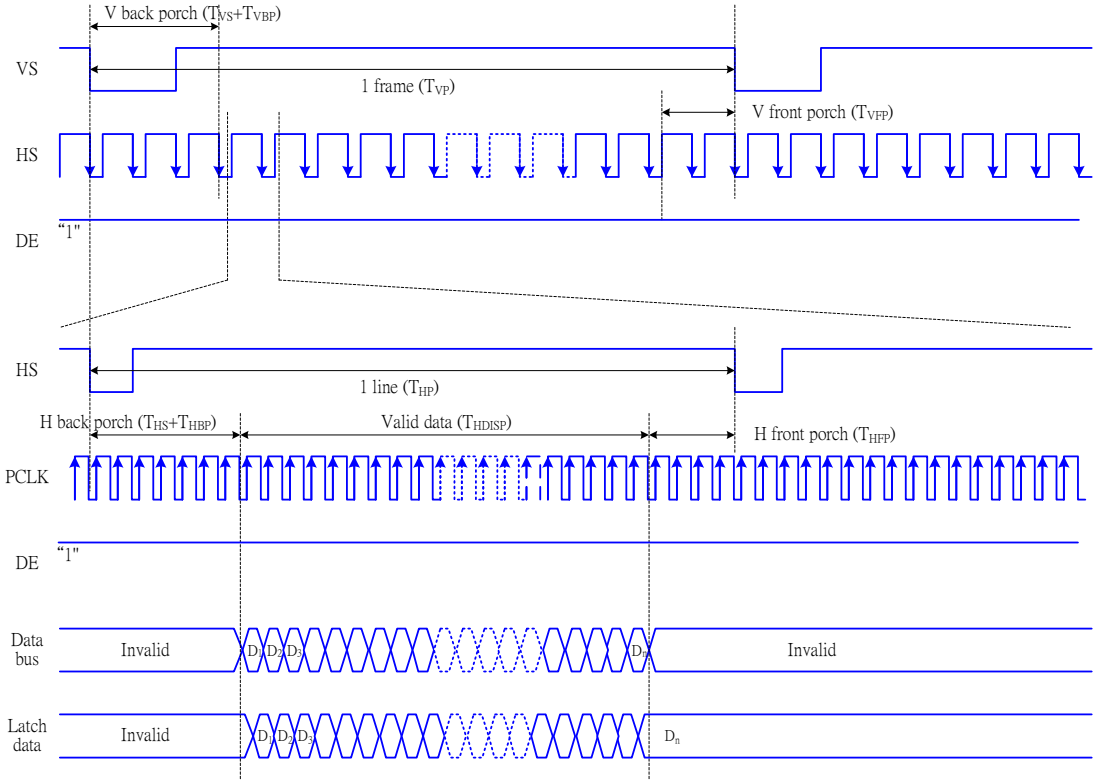

Fig. 9.9.10 RGB mode 2 timing diagram

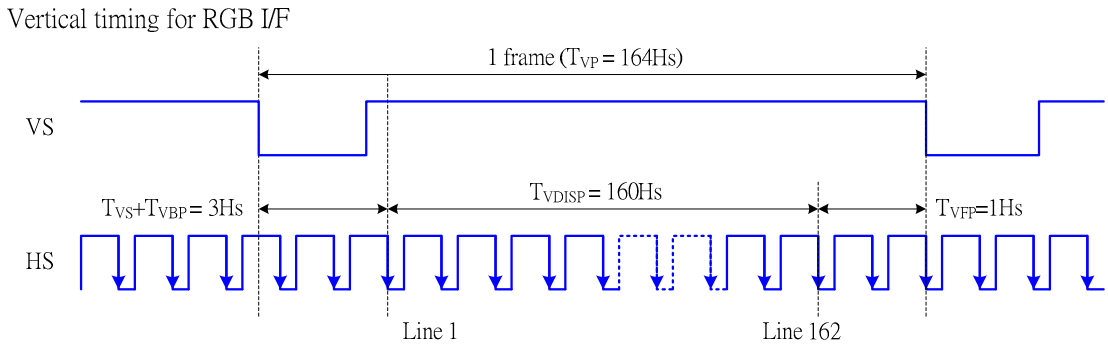

Fig. 9.9.11 RGB mode 2 vertical timing diagram

Note: DP='0', EP='0', HSP='0' and VSP='0' of RGBCTR (B0h) command.

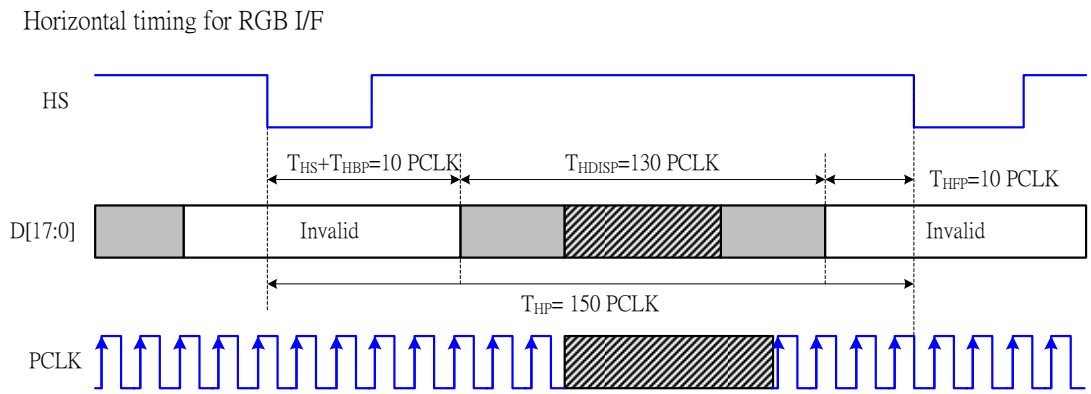

Fig. 9.9.12 RGB mode 2

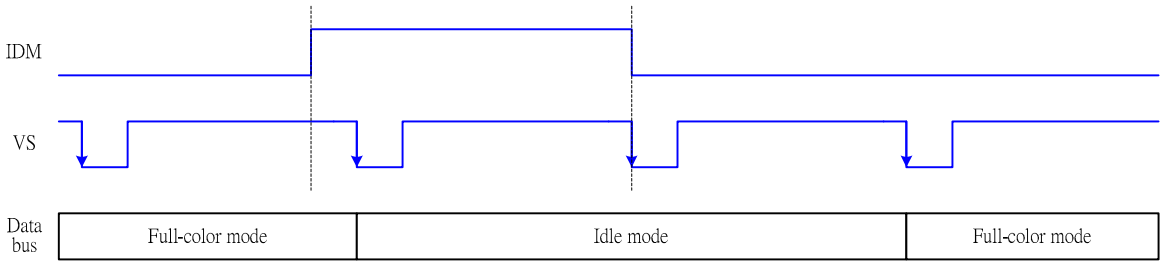

Fig. 9.9.13 RGB mode 2 idle mode timing diadram

Note: DP='0', EP='0', HSP='0' and VSP='0' of RGBCTR (B0h) command.

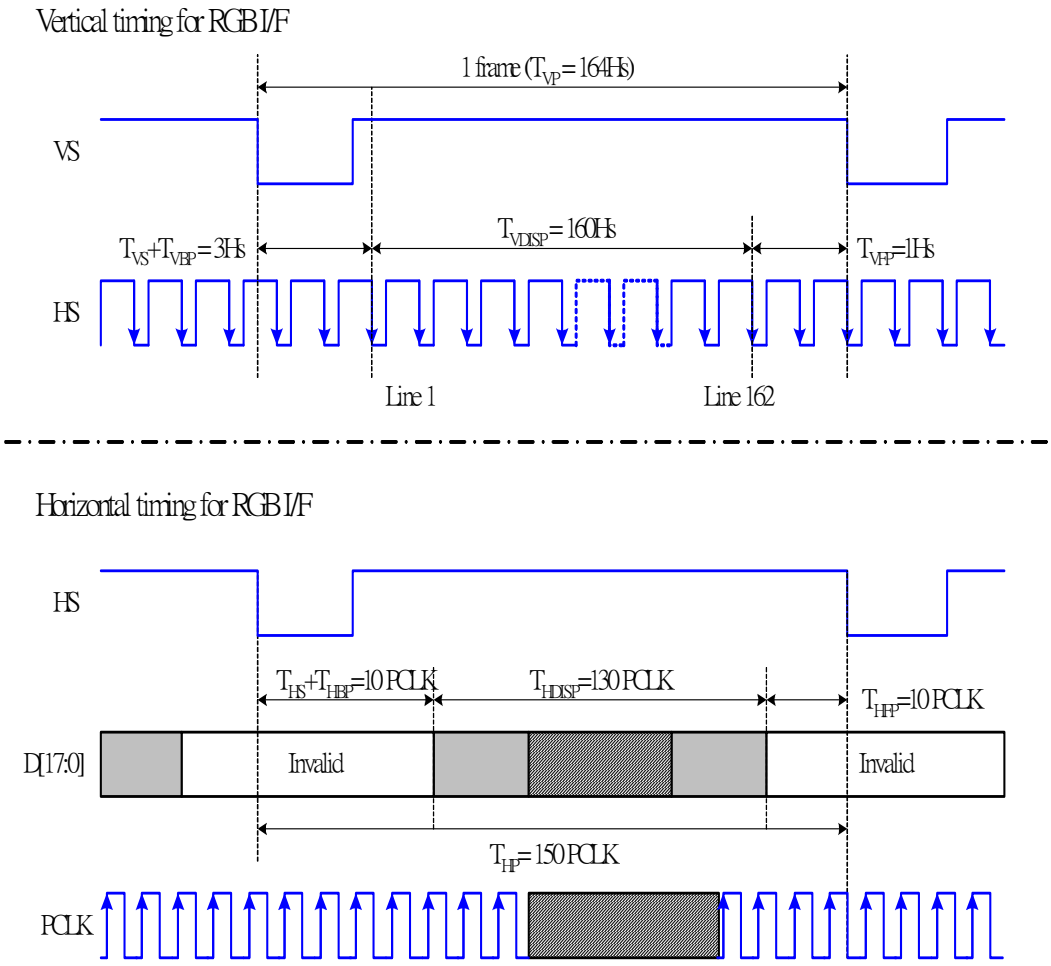

Fig. 9.9.14 Vertical and Horizontal in RGB interface

Table 9.9.6.3 Vertical and Horizontal Timing for RGB I/F

Item	Symbol	Condition	Specification			Unit
			Min	Type.	Max	
Vertical Timing						
Vertical cycle period	T_{VP}	GM="00"&"01"	163	164		HS
Vertical low pulse width	T_{VS}		1		4	HS
Vertical front porch	T_{VFP}		1	1	512	HS
Vertical back porch	T_{VBP}		1		512	HS
Vertical data start line		$T_{VS} + T_{VBP}$	2	3	512	HS
Vertical blanking period	T_{VBL}	$T_{VS} + T_{VBP} + T_{VFP}$	3	4	512	HS
Vertical active area	T_{VDISP}	GM="00"&"01"		160		HS
Vertical refresh rate	TVRR	Frame rate	61.75	65	68.25	Hz
Horizontal Timing						
Horizontal cycle period	T_{HP}	GM="00"	131		511	PCLK
		GM="01"	123		511	PCLK
Horizontal low pulse width	T_{HS}		1		63	PCLK
Horizontal front porch	T_{HFP}		1		63	PCLK
Horizontal back porch	T_{HBP}		1		63	PCLK
Horizontal data start point		$T_{HS} + T_{HBP}$	1	10	63	PCLK
Horizontal blanking period	T_{HBL}		3	20	256	PCLK
Horizontal active area	T_{HDISP}	GM="00"		128		PCLK
		GM="01"		120		PCLK
Pixel clock cycle	$T_{PCLKCYC}$		100	634	720	ns
	$f_{PCLKCYC}$		1.39	1.58	10	MHz
	$T_{PCLKCYC}$		100	670	767	ns
	$f_{PCLKCYC}$		1.30	1.49	10	MHz
	$T_{PCLKCYC}$		100	788	896	ns
	$f_{PCLKCYC}$		1.12	1.27	10	MHz

Note 1. VDDI=1.6 to 3.3V, VDD=2.5V to 3.3V, AGND=DGND=0V, Ta=-30 to 70℃
Note 2. Data lines can be set to "High" or "Low" during blanking time – Don't care.
Note 3. HP is multiples of eight PCLK.

9.9.6.4 Power On Sequence on RGB Mode 2

The Driver operates power up and display ON by VDD, VDDI, SHUT, VS, HS, DE, PCLK on RGB mode 2 as show as following figure.

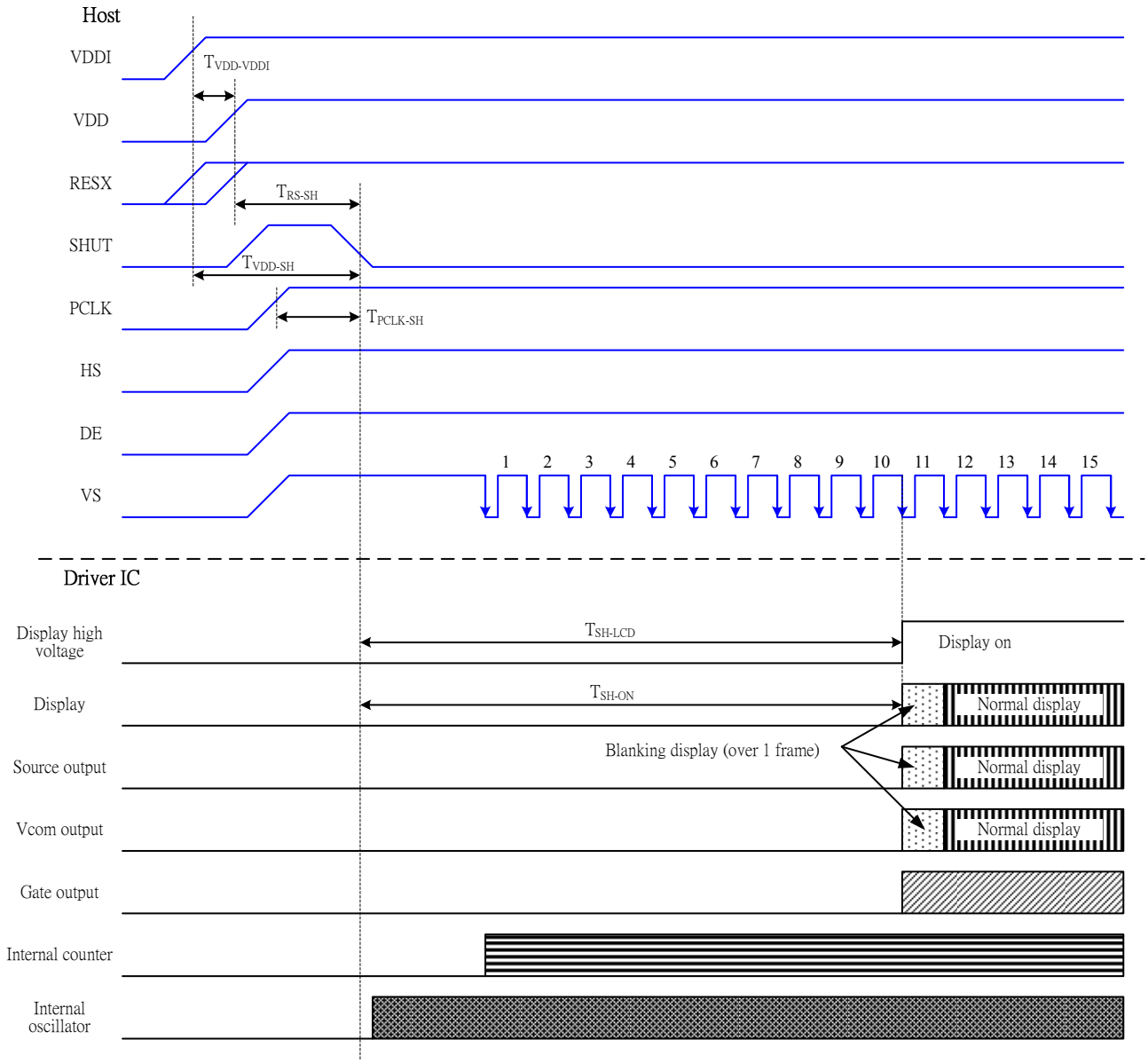

Fig. 9.9.15 Power-ON sequence in RGB mode 2

Table 9.9.6.4 Power ON AC Characteristics

Characteristics	Symbol	Min	Typ	Max	Unit	Remark
VDDI On to VDD On	TVDDI-VDD	0			ns	Note1
VDDI/VDD on to falling edge of SHUT	TVDD-SH	1			ms	
RESX to falling of SHUT	TRS-SH	10			us	
Signals input to falling edge of SHUT *	TCLK-SH	1			PCLK	Note2
Falling edge of SHUT to LCD power ON	TSH-LCD			120	ms	
Falling edge of SHUT to Display start	TSH-ON		10		VS	

Note 1: TVDDI-VDD can be <=0ns, >0ns. In any case, VDDI and VDD power up sequence should not have any impact on the driver / display functionalities / performance.
Note 2: Signals mean VS, HS, DE and PCLK signal.
Note 3: DP='0', EP='0', HSP='0' and VSP='0' of RGBCTR (B0h) command.

9.9.6.5 Power OFF Sequence on RGB Mode 2

The Driver operates power off and display OFF by VDD, VDDI, SHUT, VS, HS and DE on RGB mode 2 as show as following figure.

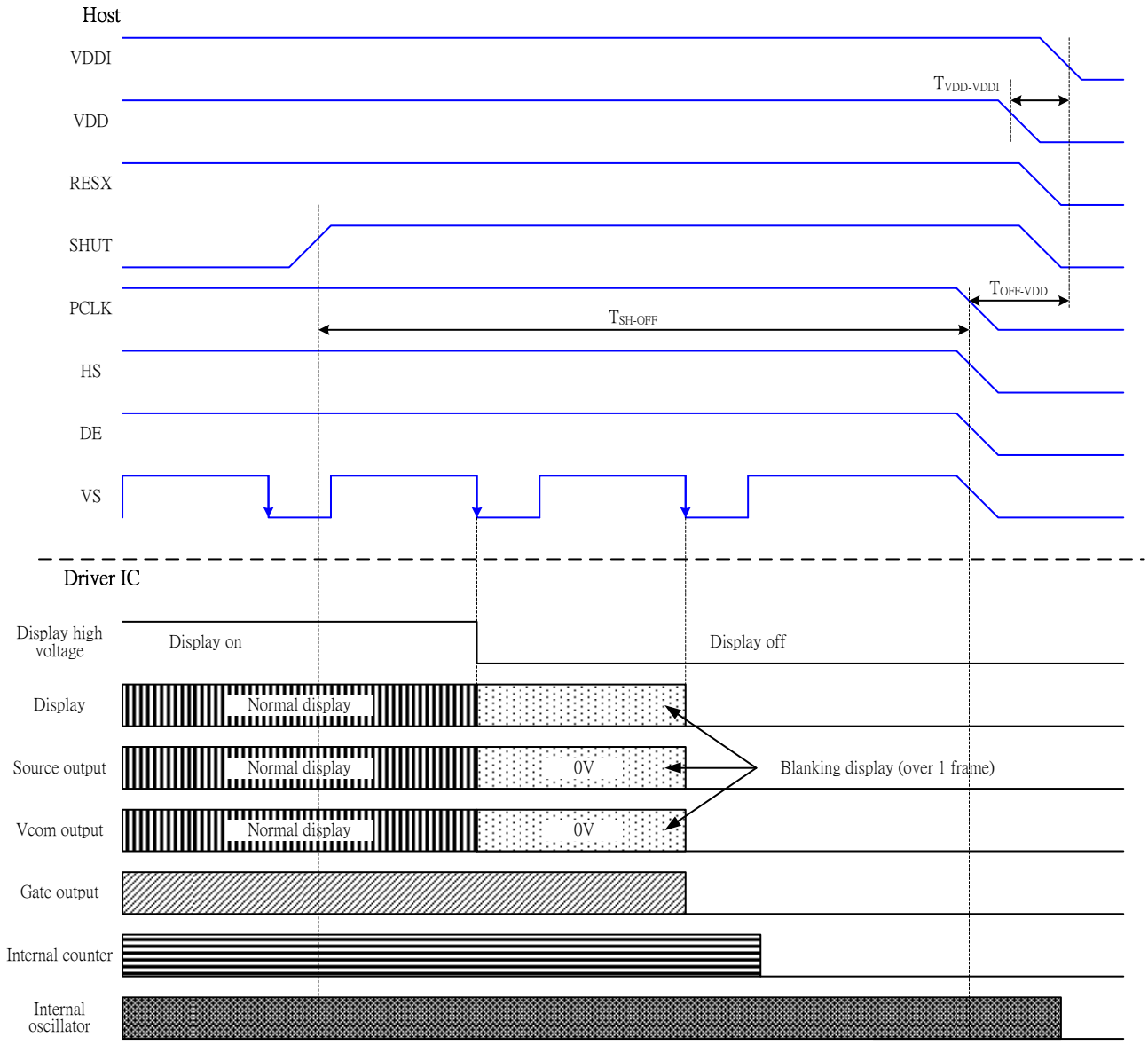

Fig. 9.9.16 Power-OFF seqnence in RGB mode 2

Table 9.9.6.5 Power OFF AC Characteristics

Characteristics	Symbol	Min	Typ	Max	Unit	Remark
VDDI On to VDD On	TVDDI-VDD	0			ns	Note1
Signals input to VDDI/VDD off	TSH-OFF	1			us	Note2
Rising edge of SHUT to Display off	TSH-OFF	2			VS	

Note 1: TVDDI-VDD can be <=0ns, >0ns. In any case, VDDI and VDD power up sequence should not have any impact on the driver / display functionalities / performance.
Note 2: Signals mean VS, HS, DE and PCLK signal.
Note 3: DP='0', EP='0', HSP='0' and VSP='0' of RGBCTR (B0h) command.

9.9.7 RGB Data Color Coding

9.9.7.1 16-bit/pixel Color Order on the RGB Interface

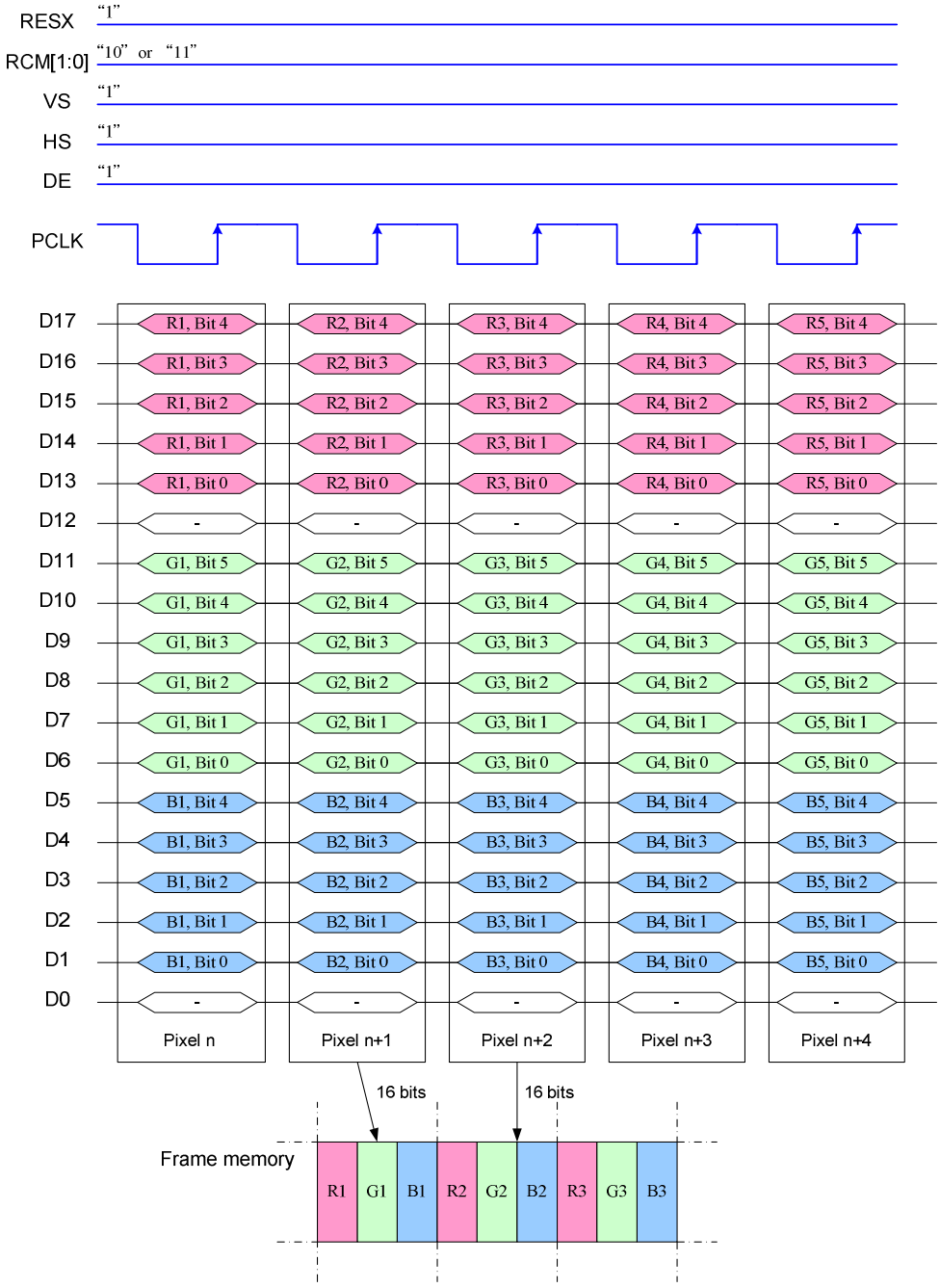

Note 1: The data order is as follows, MSB=D17, LSB=D0 and picture data is MSB=Bit5, LSB=Bit0 for Green data and MSB=Bit4, LSB=Bit0 for Red and Blue data.
Note 2: '-' Don't care, but need set to VDDI or DGND level.

9.9.7.2 18-bit/pixel Color Order on the RGB Interface

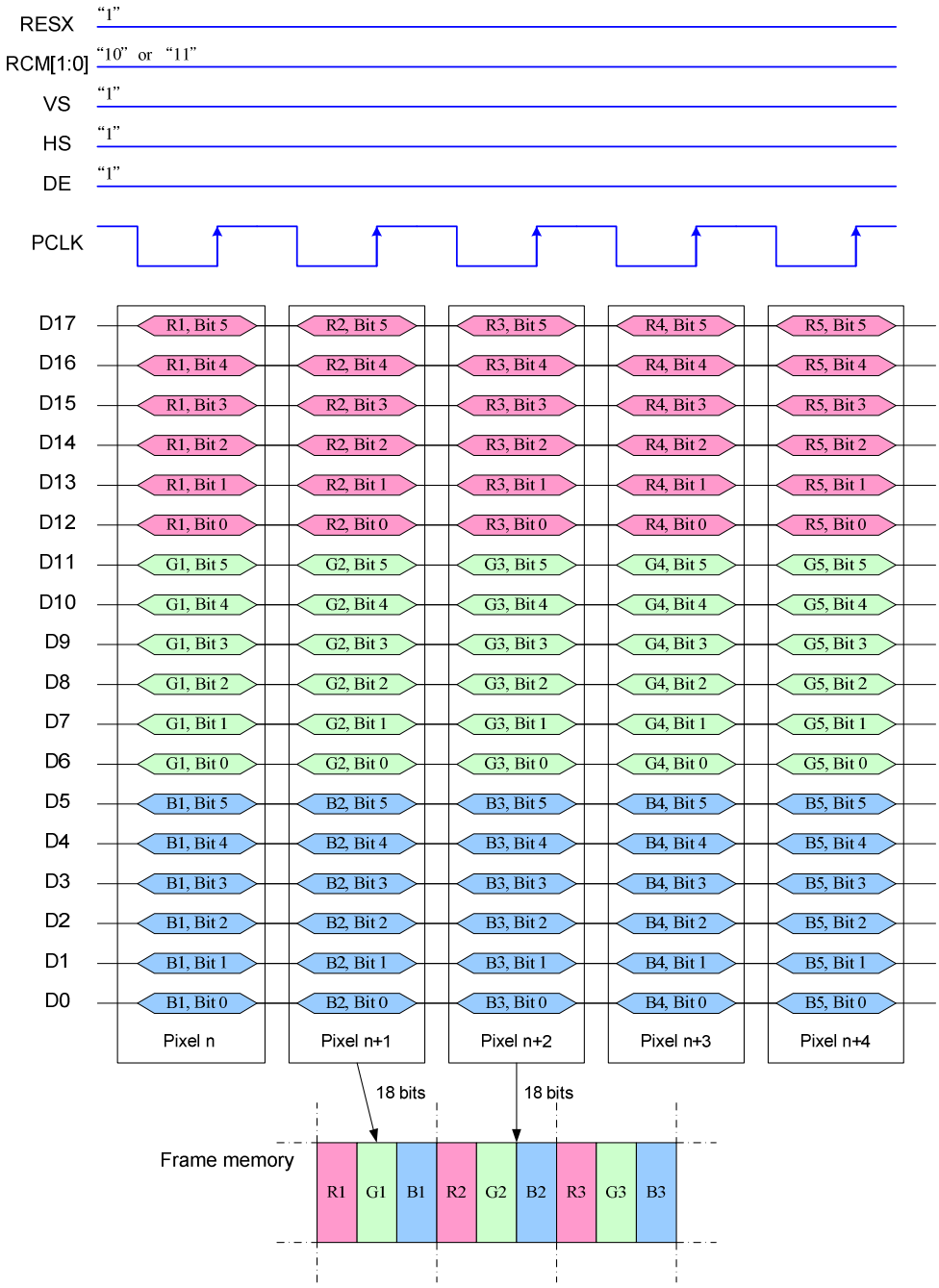

Note 1: The data order is as follows, MSB=D17, LSB=D0 and picture data is MSB=Bit5, LSB=Bit0 for Red, Green and Blue data.
Note 2: '-' Don't care, but need set to VDDI or DGND level.

9.9.7.3 6-bit/pixel Color Order on the RGB Interface

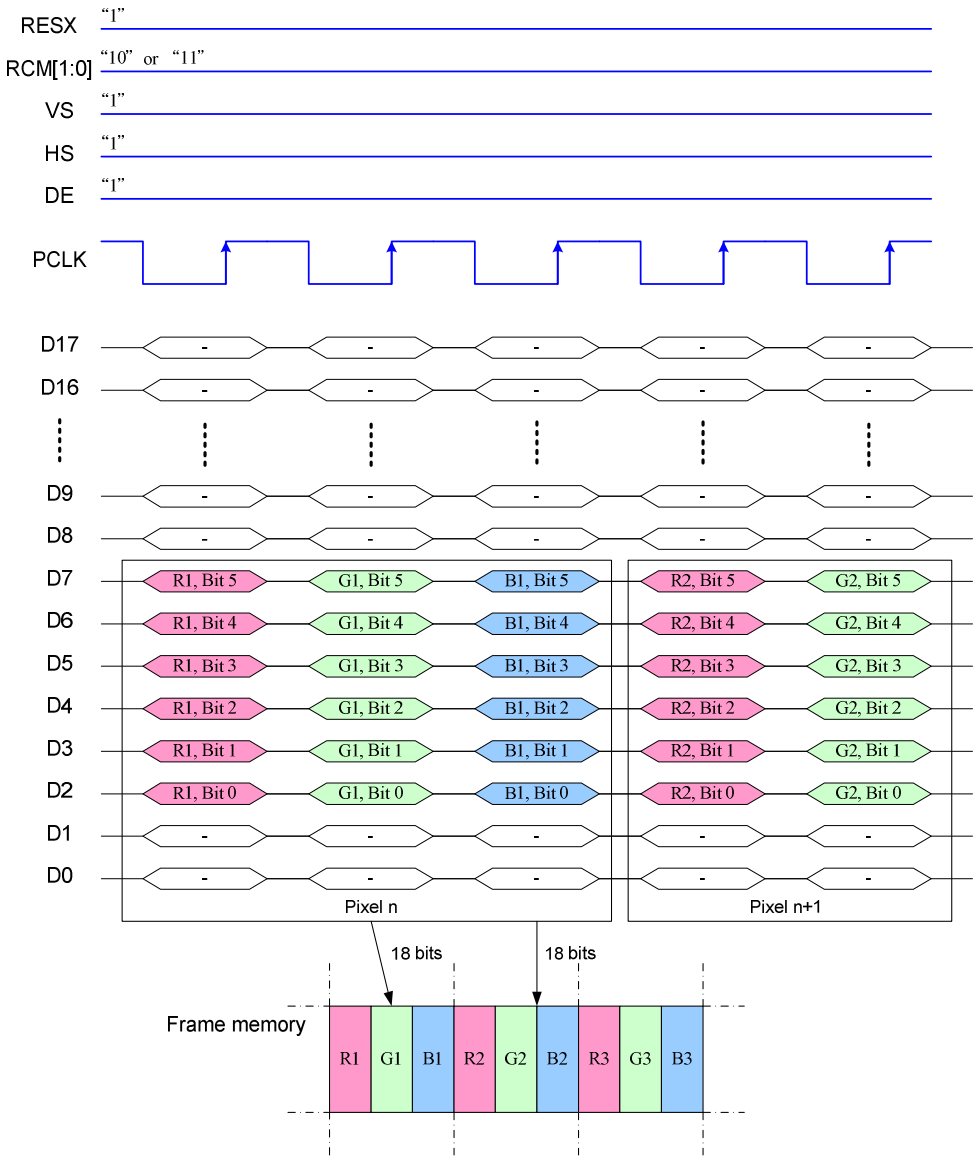

Note 1: The data order is as follows, MSB=D17, LSB=D0 and picture data is MSB=Bit5, LSB=Bit0 for Red, Green and Blue data.
Note 2: '-' Don't care, but need set to VDDI or DGND level.

9.10 Display Data RAM

9.10.1 Configuration (When GM="11")

The display module has an integrated 132x162x18-bit graphic type static RAM. This 384,912-bit memory allows to store on-chip a 132xRGBx162image with an 18-bpp resolution (262K-color).
There will be no abnormal visible effect on the display when there is a simultaneous Panel Read and Interface Read or Write to the same location of the Frame Memory.

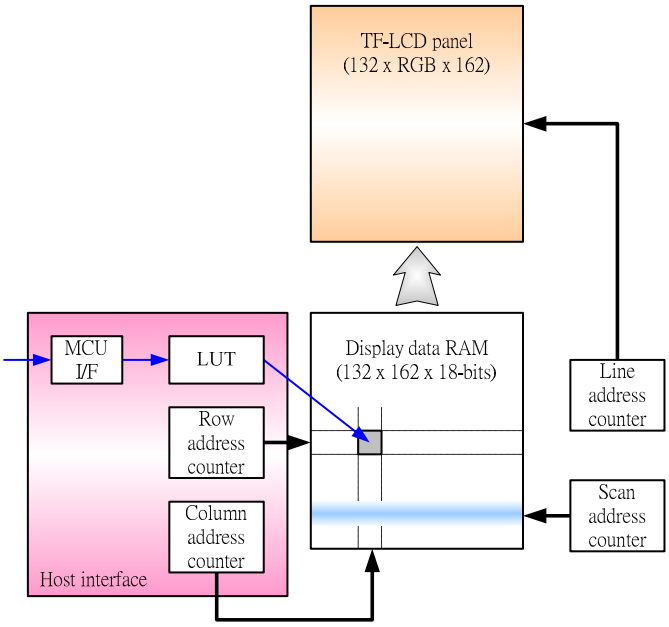

Fig. 9.10.1 Display data RAM organization

9.10.2 Memory to Display Address Mapping

9.10.2.1 When using 128RGB x 160 resolution (GM1, GM0 = “00”, SMX=SMY=SRGB=’0’)

			Pixel 1			Pixel 2			--------	Pixel 127			Pixel 128				
Gate Out	Source Out		S7	S8	S9	S10	S11	S12	--------	S385	S386	S387	S388	S389	S390		
	RA		RGB=0		RGB=1	RGB=0		RGB=1	RGB Order	RGB=0		RGB=1	RGB=0		RGB=1	SA	
	MY=' 0 '	MY=' 1 '														ML=' 0 '	ML=' 1 '
2	0	159	R0	G0	B0	R1	G1	B1	--------	R126	G126	B126	R127	G127	B127	0	159
3	1	158							--------							1	158
4	2	157							--------							2	157
5	3	156							--------							3	156
6	4	155							--------							4	155
7	5	154							--------							5	154
8	6	153							--------							6	153
9	7	152							--------							7	152
⋮	⋮	⋮	⋮	⋮	⋮	⋮	⋮	⋮	⋮	⋮	⋮	⋮	⋮	⋮	⋮	⋮	⋮
154	152	7							--------							152	7
155	153	6							--------							153	6
156	154	5							--------							154	5
157	155	4							--------							155	4
158	156	3							--------							156	3
159	157	2							--------							157	2
160	158	1							--------							158	1
161	159	0							--------							159	0
	CA	MX=' 0 '	0			1			--------	126			127				
		MX=' 1 '	127			126			--------	1			0				

Note
RA = Row Address,
CA = Column Address
SA = Scan Address
MX = Mirror X-axis (Column address direction parameter), D6 parameter of MADCTL command
MY = Mirror Y-axis (Row address direction parameter), D7 parameter of MADCTL command
MX =Scan direction parameter, D4 parameter of MADCTL command
RGB = Red, Green and Blue pixel position change, D3 parameter of MADCTL command

9.10.2.2 When using 120RGB x 160 resolution (GM1, GM0 = “01”, SMX=SMY=SRGB=’0’)

			Pixel 1			Pixel 2			--------	Pixel 119			Pixel 120				
Gate Out	Source Out		S7	S8	S9	S10	S11	S12	--------	S361	S362	S363	S364	S365	S366		
	RA		RGB=0		RGB=1	RGB=0		RGB=1	RGB Order	RGB=0		RGB=1	RGB=0		RGB=1	SA	
	MY=' 0 '	MY=' 1 '														ML=' 0 '	ML=' 1 '
2	0	159	R0	G0	B0	R1	G1	B1	--------	R118	G118	B118	R119	G119	B119	0	159
3	1	158							--------							1	158
4	2	157							--------							2	157
5	3	156							--------							3	156
6	4	155							--------							4	155
7	5	154							--------							5	154
8	6	153							--------							6	153
9	7	152							--------							7	152
I	I	I	I	I	I	I	I	I	I	I	I	I	I	I	I	I	I
I	I	I	I	I	I	I	I	I	I	I	I	I	I	I	I	I	I
I	I	I	I	I	I	I	I	I	I	I	I	I	I	I	I	I	I
I	I	I	I	I	I	I	I	I	I	I	I	I	I	I	I	I	I
I	I	I	I	I	I	I	I	I	I	I	I	I	I	I	I	I	I
154	152	7							--------							152	7
155	153	6							--------							153	6
156	154	5							--------							154	5
157	155	4							--------							155	4
158	156	3							--------							156	3
159	157	2							--------							157	2
160	158	1							--------							158	1
161	159	0							--------							159	0
	CA	MX=' 0 '	0			1			--------	118			119				
		MX=' 1 '	119			118			--------	1			0				

Note
RA = Row Address,
CA = Column Address
SA = Scan Address
MX = Mirror X-axis (Column address direction parameter), D6 parameter of MADCTL command
MY = Mirror Y-axis (Row address direction parameter), D7 parameter of MADCTL command
MX =Scan direction parameter, D4 parameter of MADCTL command
RGB = Red, Green and Blue pixel position change, D3 parameter of MADCTL command

9.10.2.3 When using 132RGB x 162 resolution (GM1, GM0 = “11”, SMX=SMY=SRGB=’0’)

			Pixel 1			Pixel 2			--------	Pixel 131			Pixel 132				
Gate Out	Source Out		S1	S2	S3	S4	S5	S6	--------	S391	S392	S393	S394	S395	S396		
	RA		RGB=0		RGB=1	RGB=0		RGB=1	RGB Order	RGB=0		RGB=1	RGB=0		RGB=1	SA	
	MY=' 0 '	MY=' 1 '														ML=' 0 '	ML=' 1 '
1	0	161	R0	G0	B0	R1	G1	B1	--------	R131	G131	B131	R132	G132	B132	0	161
2	1	160							--------							1	160
3	2	159							--------							2	159
4	3	158							--------							3	158
5	4	157							--------							4	157
6	5	156							--------							5	156
7	6	155							--------							6	155
8	7	154							--------							7	154
⋮	⋮	⋮	⋮	⋮	⋮	⋮	⋮	⋮	⋮	⋮	⋮	⋮	⋮	⋮	⋮	⋮	⋮
155	154	7							--------							154	7
156	155	6							--------							155	6
157	156	5							--------							156	5
158	157	4							--------							157	4
159	158	3							--------							158	3
160	159	2							--------							159	2
161	160	1							--------							160	1
162	161	0							--------							161	0
	CA	MX=' 0 '	0			1			--------	130			131				
		MX=' 1 '	131			130			--------	1			0				

Note
RA = Row Address,
CA = Column Address
SA = Scan Address
MX = Mirror X-axis (Column address direction parameter), D6 parameter of MADCTL command
MY = Mirror Y-axis (Row address direction parameter), D7 parameter of MADCTL command
MX =Scan direction parameter, D4 parameter of MADCTL command
RGB = Red, Green and Blue pixel position change, D3 parameter of MADCTL command

9.10.3 Normal Display On or Partial Mode On, Vertical Scroll Off

9.10.3.1 When using 128RGB x 160 resolution (GM1, GM0 = “00”)

In this mode, the content of the frame memory within an area where column pointer is 00h to 7Fh and page pointer is 00h to 9Fh is displayed.
To display a dot on leftmost top corner, store the dot data at (column pointer, row pointer) = (0, 0).

1). Example for Normal Display On (MX=MY=ML=’0’ ,SMX=SMY=’0’)

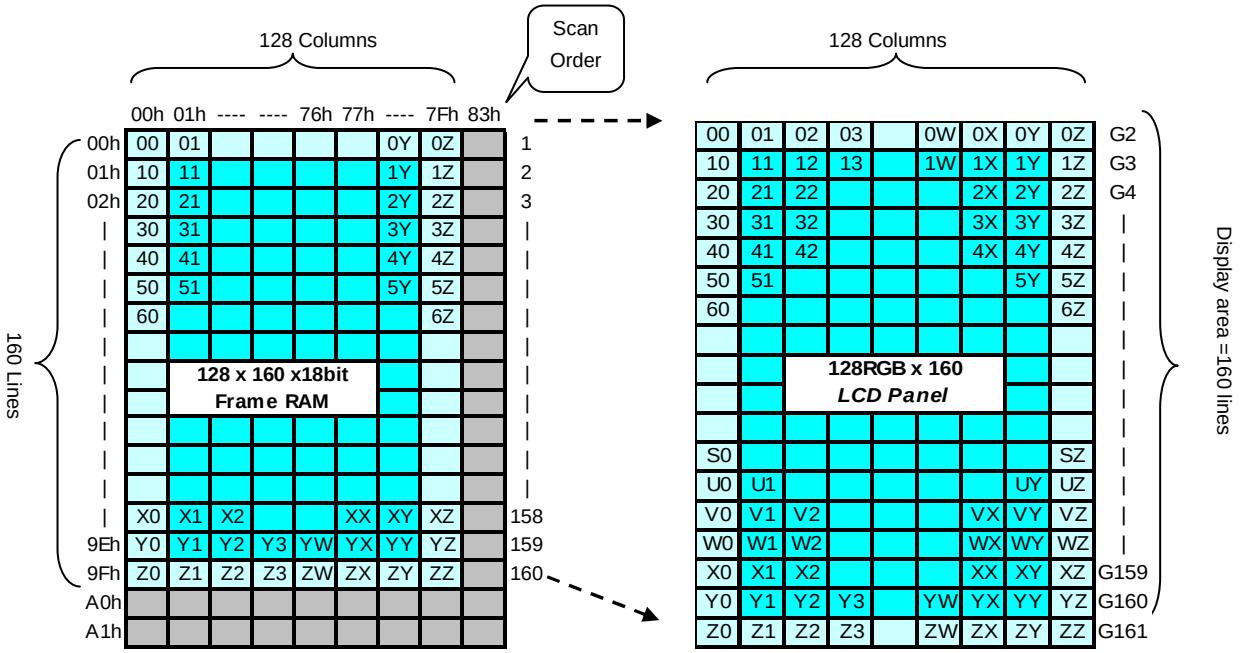

2). Example for Partial Display On (PSL[7:0]=04h,PEL[7:0]=9Bh, MX=MV=ML=’0’ ,SMX=SMY=’0’)

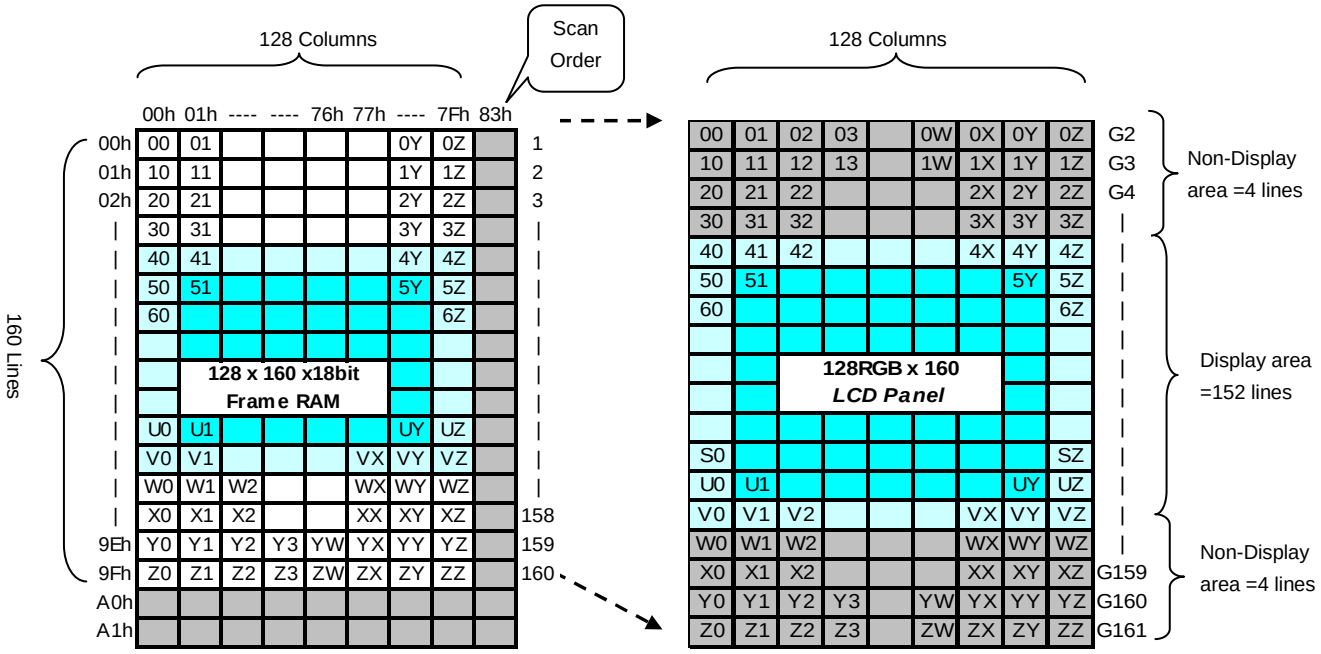

9.10.3.2 When using 120RGB x 160 resolution (GM1, GM0 = “01”)

In this mode, contents of the frame memory within an area where column pointer is 00h to 77h and page pointer is 00h to 9Fh is displayed.

To display a dot on leftmost top corner, store the dot data at (column pointer, row pointer) = (0, 0).

1). Example for Normal Display On (MX=MY=ML=’0’, SMX=SMY=’0’)

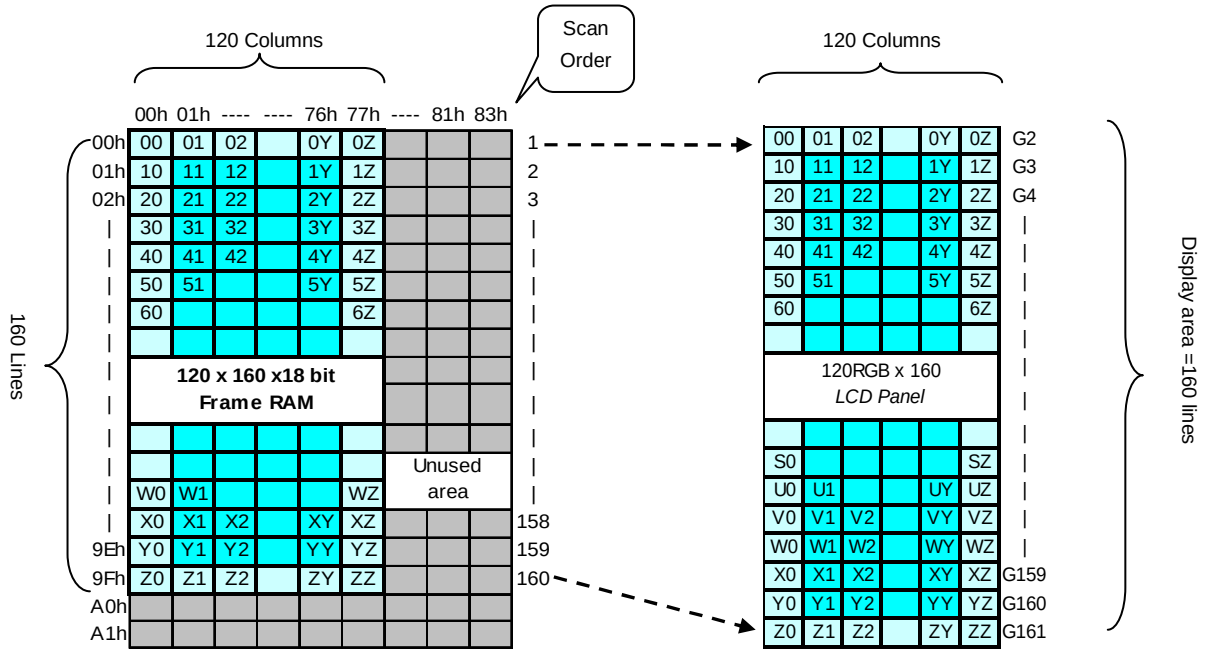

2). Example for Partial Display On (PSL[7:0]=04h,PEL[7:0]=9Bh, MX=MV=ML=’0’, SMX=SMY=’0’)

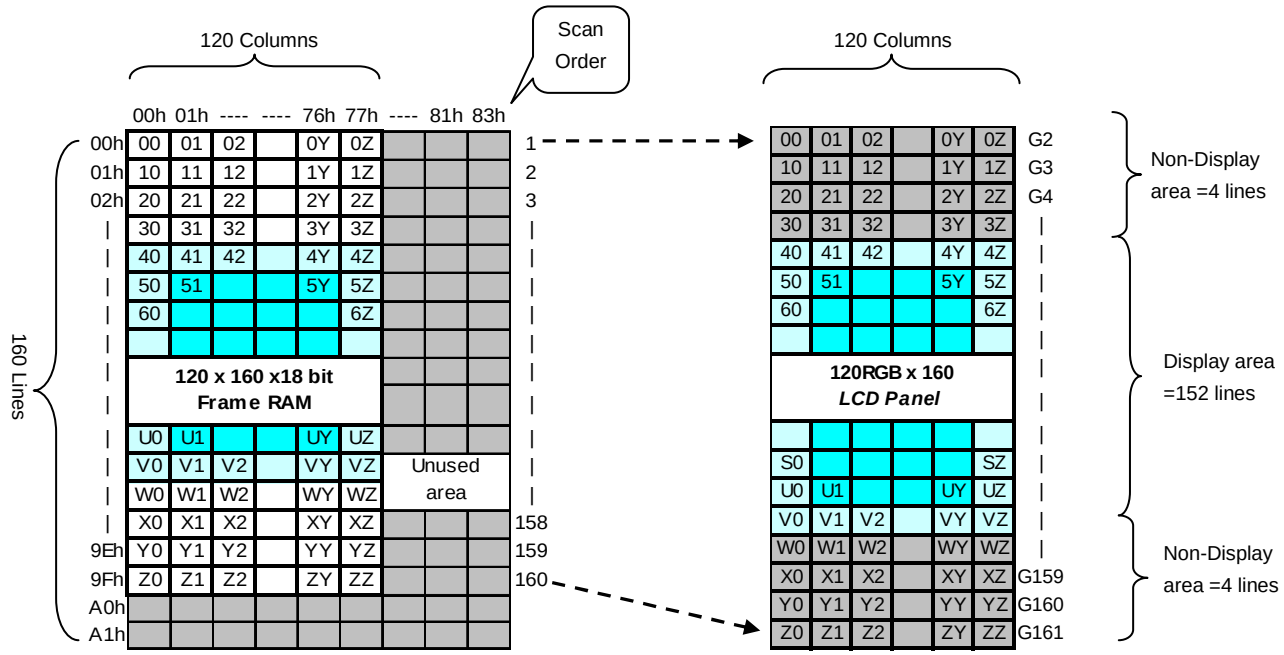

9.10.3.3 When using 132RGB x 162 resolution (GM1, GM0 = “11”)

In this mode, contents of the frame memory within an area where column pointer is 00h to 83h and page pointer is 00h to A1h is displayed.
To display a dot on leftmost top corner, store the dot data at (column pointer, row pointer) = (0, 0).

1). Example for Normal Display On (MX=MY=ML=’0’, SMX=SMY=’0’)

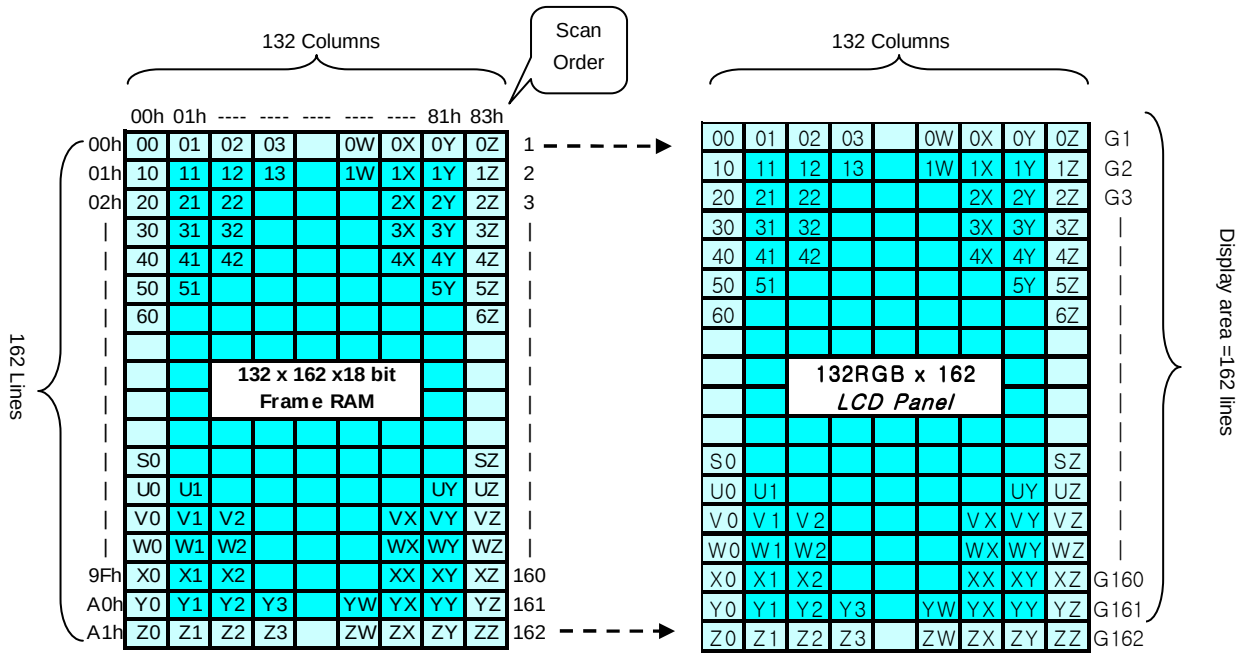

2). Example for Partial Display On (PSL[7:0]=04h,PEL[7:0]=9Dh, MX=MV=ML=’0’ ,SMX=SMY=’0’)

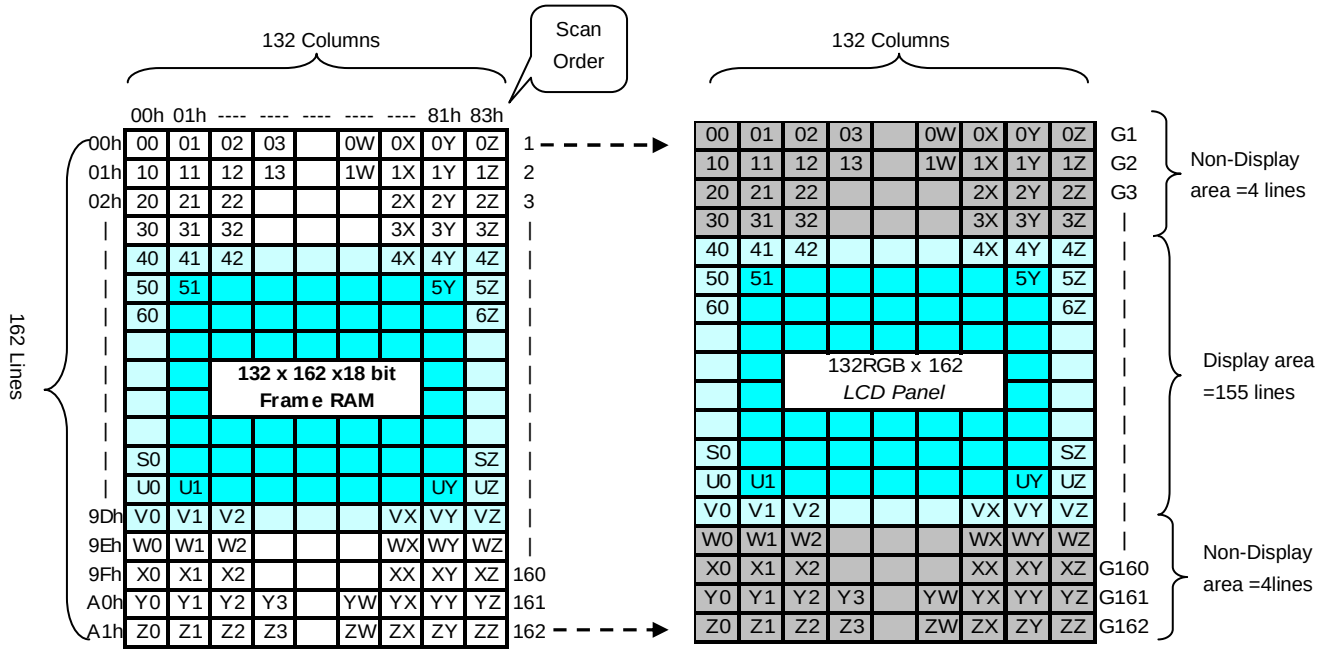

9.10.4 Vertical Scroll Mode

There is vertical scrolling, which are determined by the commands “Vertical Scrolling Definition” (33h) and Vertical Scrolling Start Address” (37h).

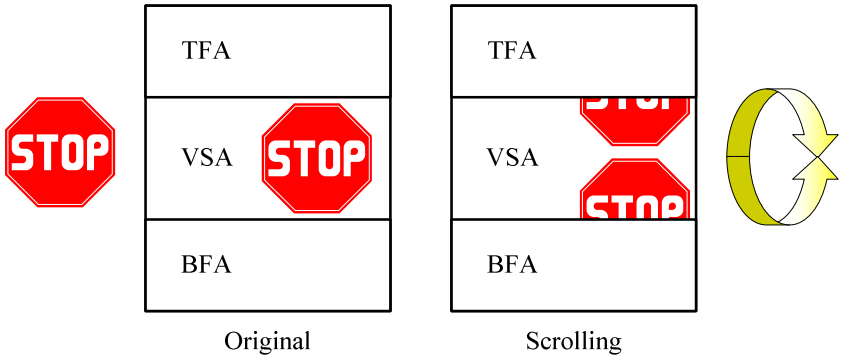

Fig. 9.10.2 Difference between Scrolling and original

9.10.4.1 When using 128RGB x 160 resolution (GM1, GM0 = “00”)

When Vertical Scrolling Definition Parameters (TFA+VSA+BFA)=160. In this case, scrolling is applied as shown below.

1). Example for TFA =3, VSA=155, BFA=2, SSA=4, ML=0: Scrolling

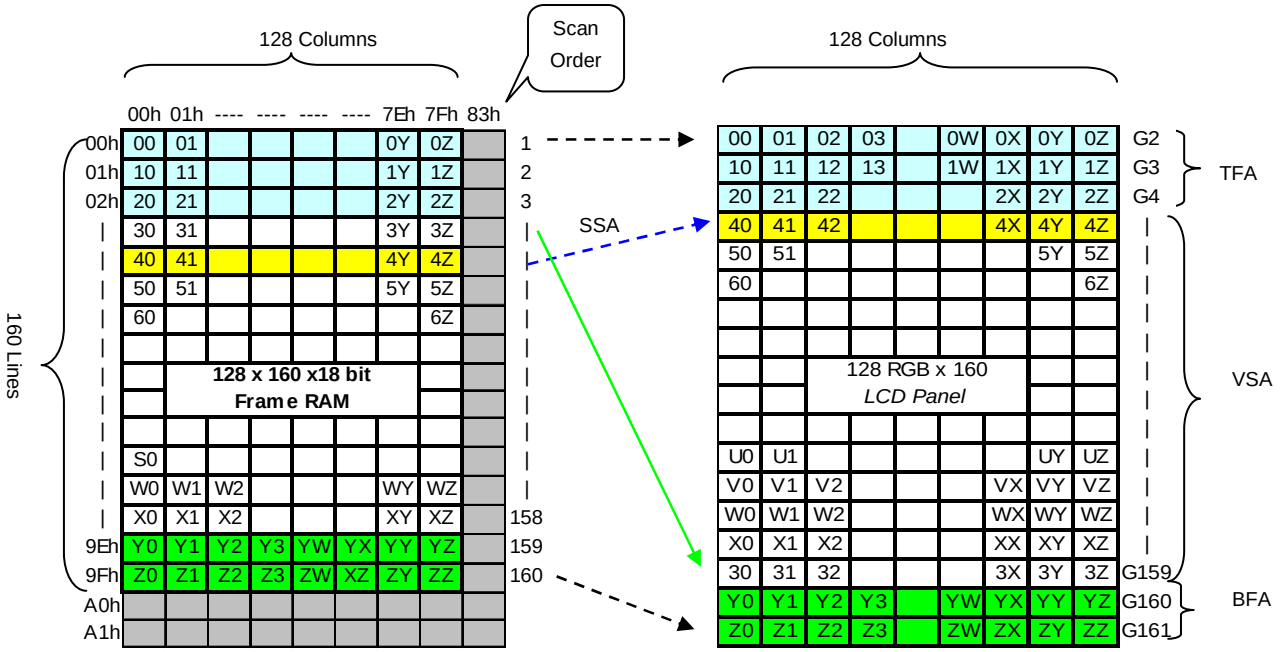

2). Example for TFA =3, VSA=155 BFA=2, SSA=4, ML=1: Scrolling: TFA and BFT are exchanged

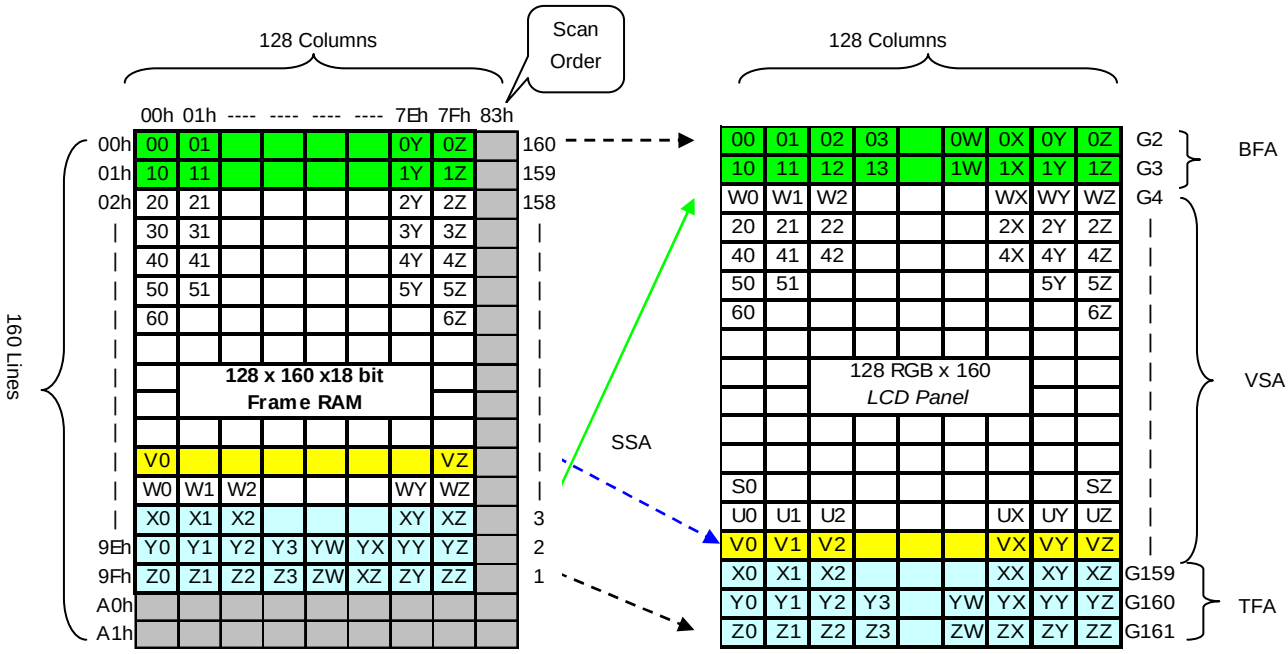

9.10.4.2 When using 120RGB x 160 resolution (GM1, GM0 = “01”)

When Vertical Scrolling Definition Parameters (TFA+VSA+BFA)=160. In this case, scrolling is applied as shown below.

1). Example for TFA =3, VSA=155, BFA=2, SSA=4, ML=0: Scrolling

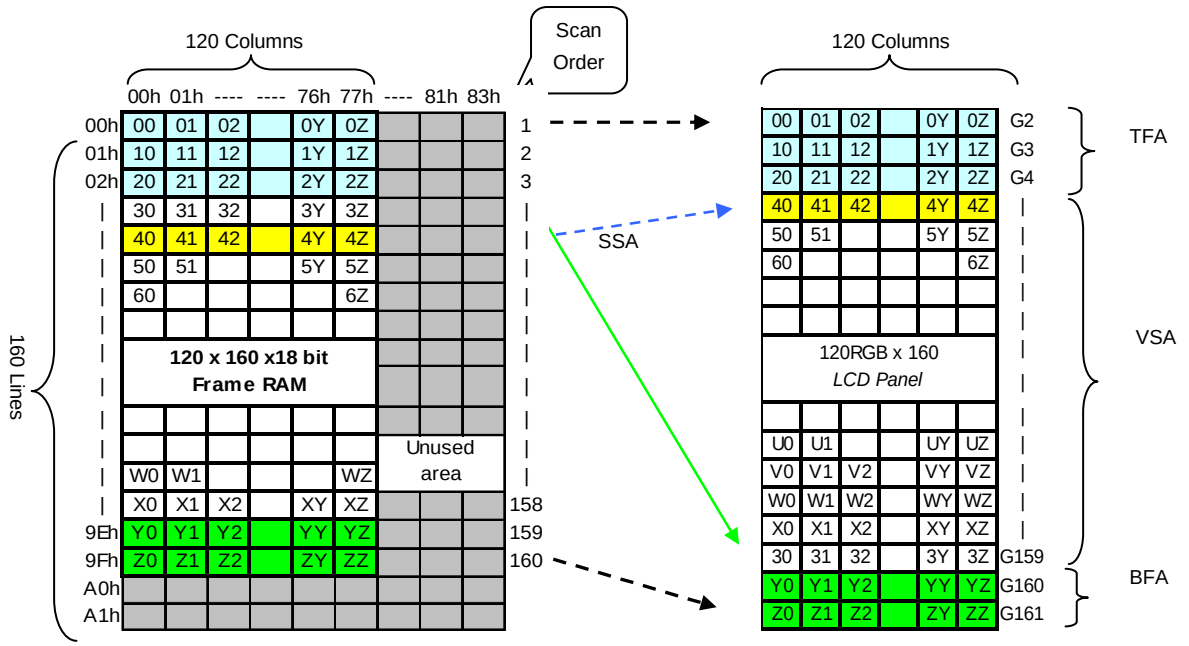

2). Example for TFA =2, VSA=155, BFA=3, SSA=4, ML=1: Scrolling: TFA and BFT are exchanged

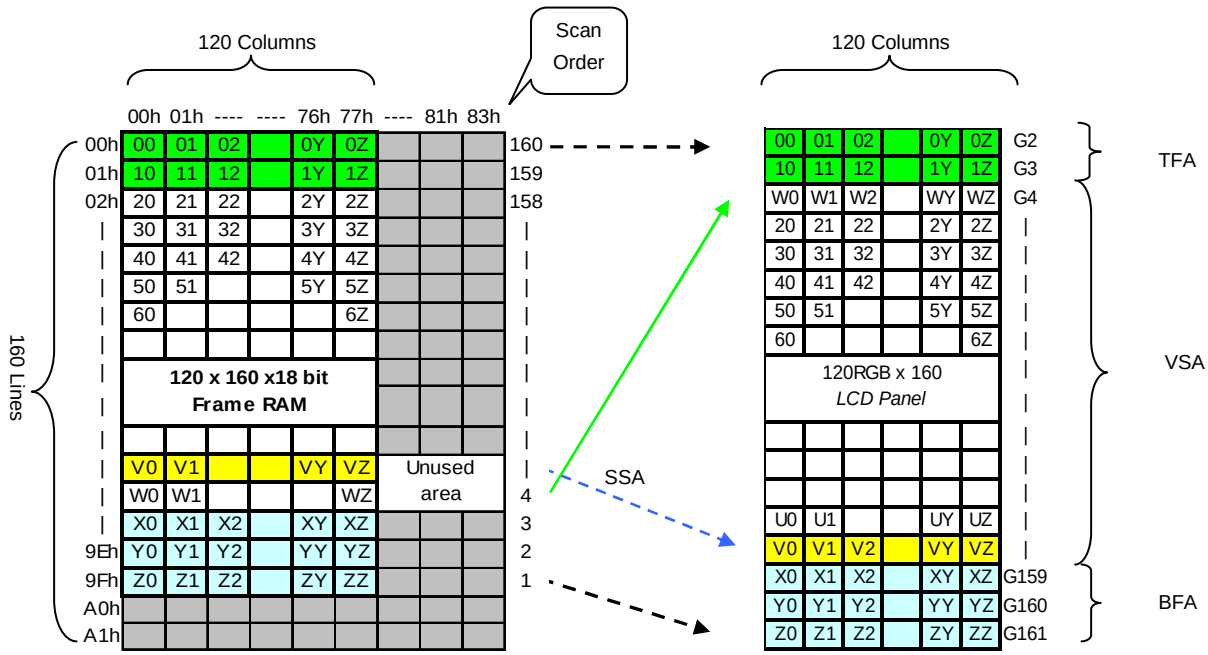

9.10.4.3 When using 132RGB x 162 resolution (GM1, GM0 = “11”)

When Vertical Scrolling Definition Parameters (TFA+VSA+BFA)=162. In this case, scrolling is applied as shown below.

1). Example for TFA =3, VSA=157, BFA=2, SSA=4, ML=0: Scrolling

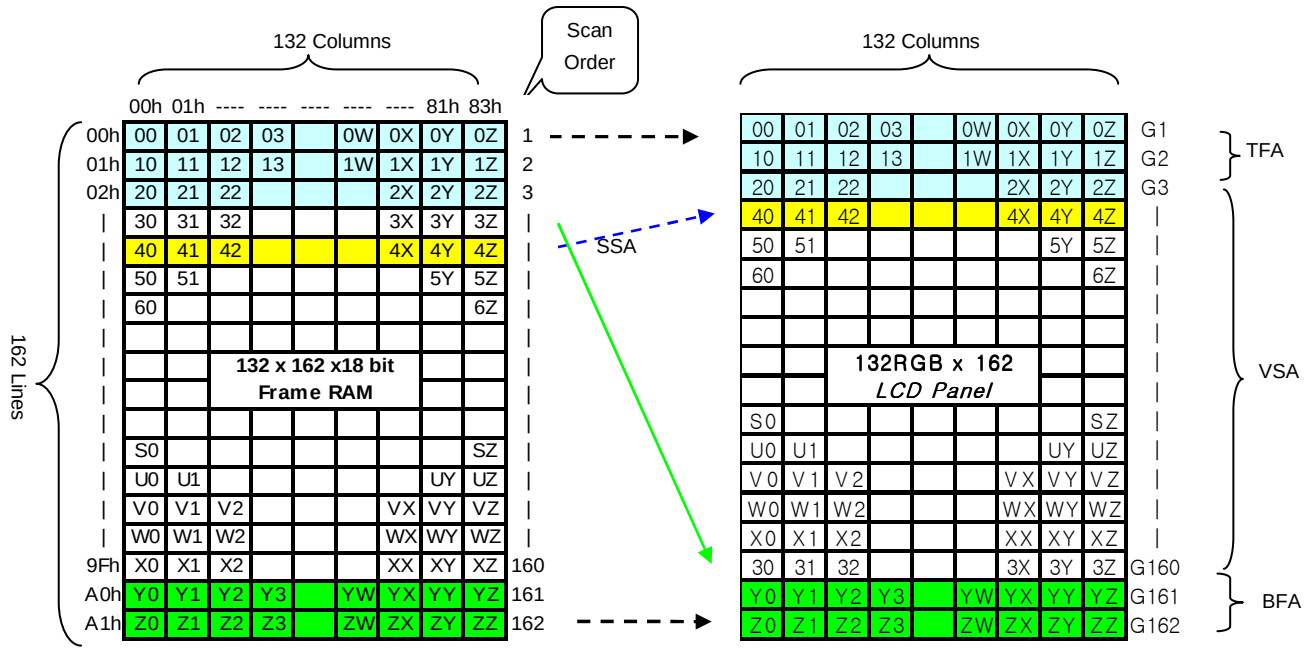

2). Example for TFA =3, VSA=157, BFA=2, SSA=4, ML=1: Scrolling: TFA and BFT are exchanged

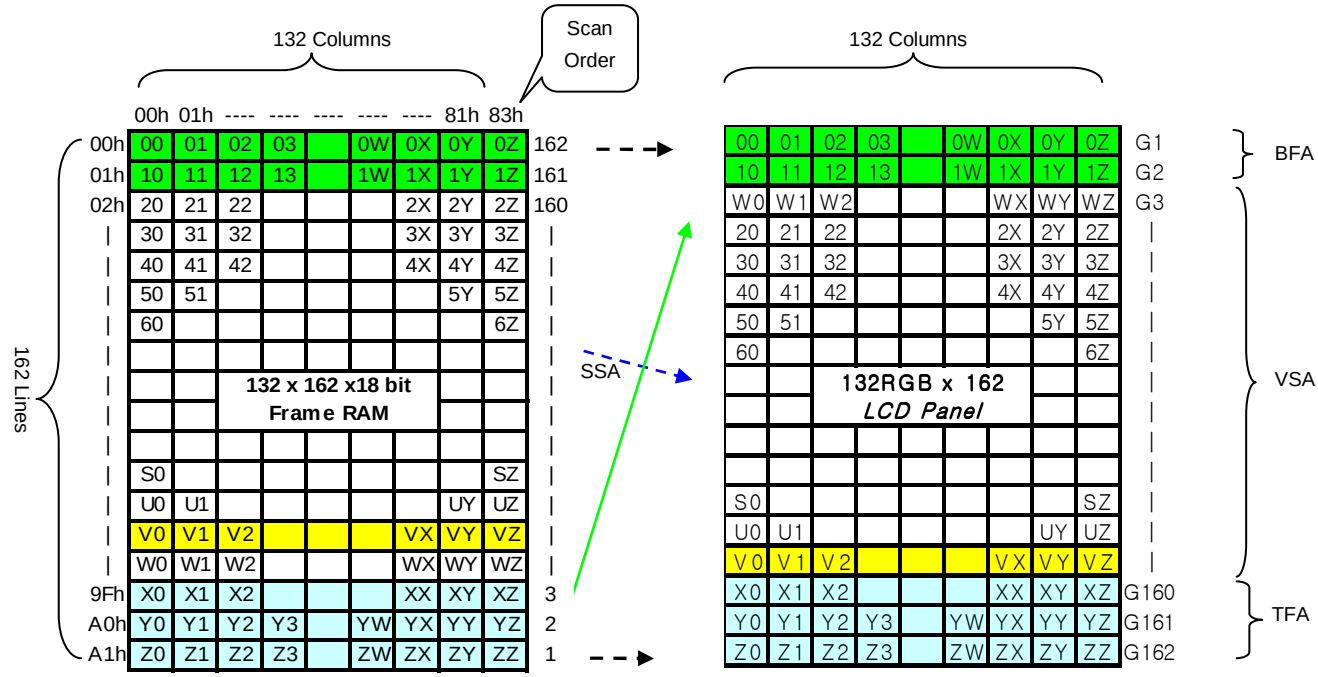

9.10.5 Vertical Scroll Example

9.10.5.1 Vertical Scroll Example (GM1, GM0 = “00” & GM1, GM0=“01”)

There are 2 types of vertical scrolling, which are determined by the commands “Vertical Scrolling Definition” (33h) and “Vertical Scrolling Start Address” (37h).

Case 1: TFA + VSA + BFA≠160
N/A. Do not set TFA + VSA + BFA≠160. In that case, unexpected picture will be shown.

Case 2: TFA + VSA + BFA=160 (Scrolling)
Example1) When MADCTL parameter ML=”0”, TFA=0, VSA=160, BFA=0 and VSCSAD=80.

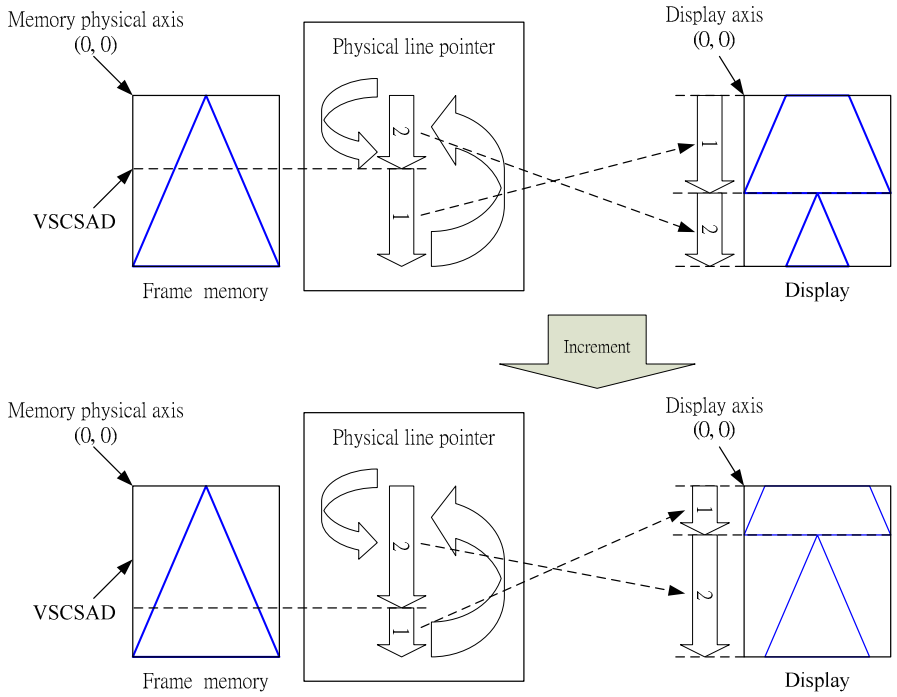

Example2) When MADCTL parameter ML=”1”, TFA=30, VSA=130, BFA=0 and VSCSAD=80.

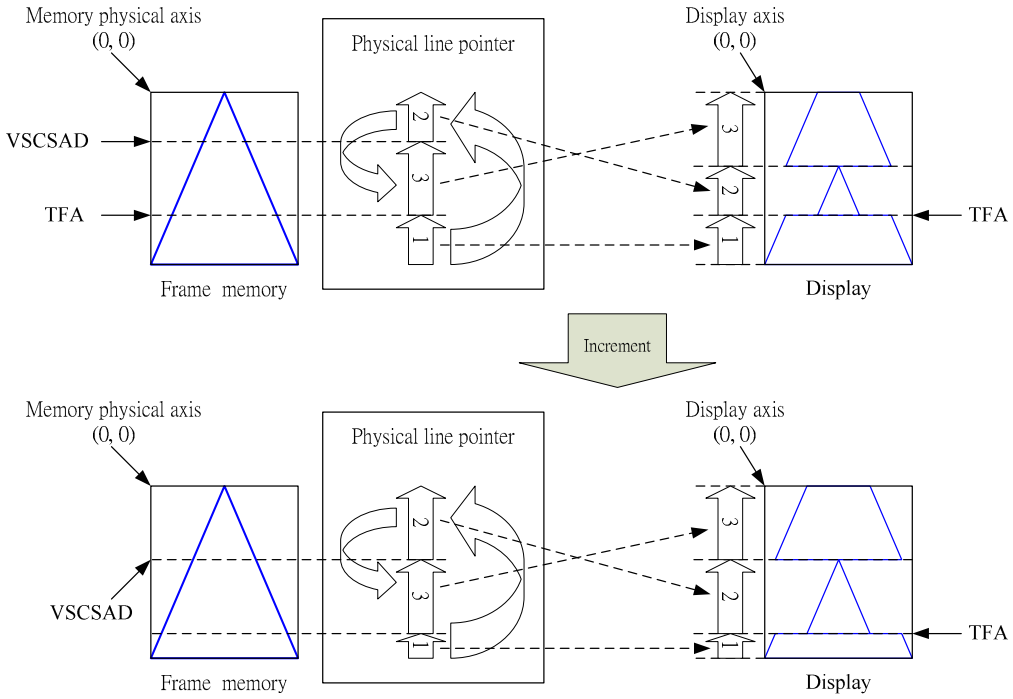

9.10.5.2 Vertical Scroll Example (GM1, GM0 = “11”)

There are 2 types of vertical scrolling, which are determined by the commands “Vertical Scrolling Definition” (33h) and “Vertical Scrolling Start Address” (37h).

Case 1: TFA + VSA + BFA≠162

N/A. Do not set TFA + VSA + BFA≠162. In that case, unexpected picture will be shown.

Case 2: TFA + VSA + BFA=162 (Scrolling)

Example1) When MADCTL parameter ML=”0”, TFA=0, VSA=162, BFA=0 and VSCSAD=40.

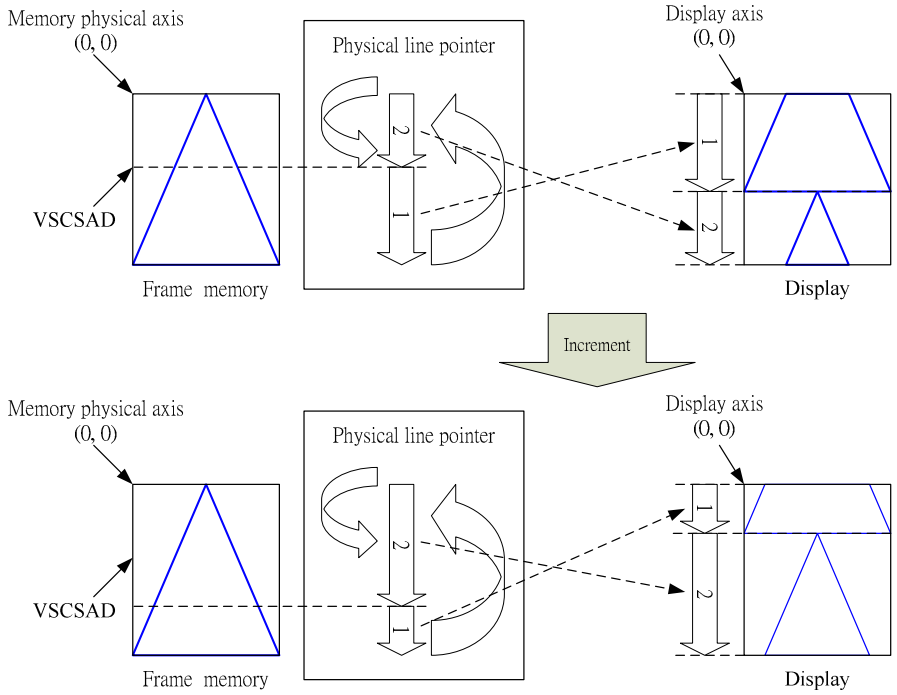

Example2) When MADCTL parameter ML=”1”, TFA=30, VSA=132, BFA=0 and VSCSAD=40.

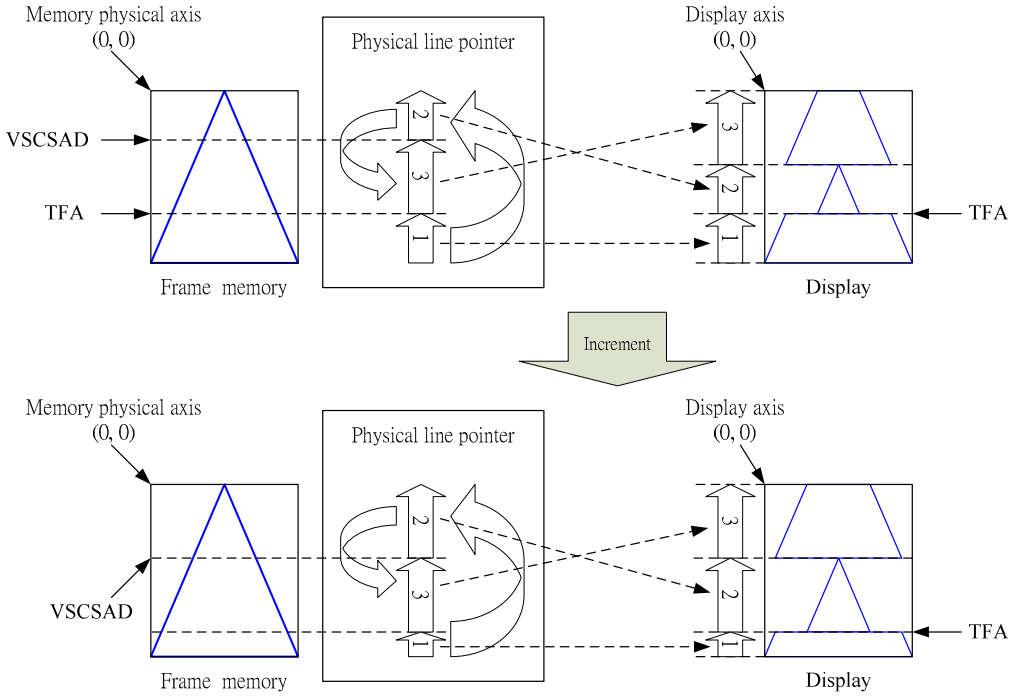

9.11 Address Counter

The address counter sets the addresses of the display data RAM for writing and reading.
Data is written pixel-wise into the RAM matrix of DRIVER. The data for one pixel or two pixels is collected (RGB 6-6-6-bit), according to the data formats. As soon as this pixel-data information is complete the "Write access" is activated on the RAM. The locations of RAM are addressed by the address pointers. The address ranges are X=0 to X=131 (83h) and Y=0 to Y=161 (A1h). Addresses outside these ranges are not allowed. Before writing to the RAM, a window must be defined that will be written. The window is programmable via the command registers XS, YS designating the start address and XE, YE designating the end address.

For example the whole display contents will be written, the window is defined by the following values: XS=0 (0h) YS=0 (0h) and XE=127 (83h), YE=161 (A1h).

In vertical addressing mode (MV=1), the Y-address increments after each byte, after the last Y-address (Y=YE), Y wraps around to YS and X increments to address the next column. In horizontal addressing mode (V=0), the X-address increments after each byte, after the last X-address (X=XE), X wraps around to XS and Y increments to address the next row. After the every last address (X=XE and Y=YE) the address pointers wrap around to address (X=XS and Y=YS).

For flexibility in handling a wide variety of display architectures, the commands "CASET, RASET and MADCTL" (see section 10 command list), define flags MX and MY, which allows mirroring of the X-address and Y-address. All combinations of flags are allowed. Section 9.12 show the available combinations of writing to the display RAM. When MX, MY and MV will be changed the data bust be rewritten to the display RAM.

For each image condition, the controls for the column and row counters apply as section 9.12 below:

Condition	Column Counter	Row Counter
When RAMWR/RAMRD command is accepted	Return to "Start Column (XS)"	Return to "Start Row (YS)"
Complete Pixel Read / Write action	Increment by 1	No change
The Column counter value is larger than "End Column (XE)"	Return to "Start Column (XS)"	Increment by 1
The Column counter value is larger than "End Column (XE)" and the Row counter value is larger than "End Row (YE)"	Return to "Start Column (XS)"	Return to "Start Row (YS)"

9.12. Memory Data Write/ Read Direction

The data is written in the order illustrated above. The Counter which dictates where in the physical memory the data is to be written is controlled by "Memory Data Access Control" Command, bits B5 (MV), B6 (MX), B7 (MY) as described below.

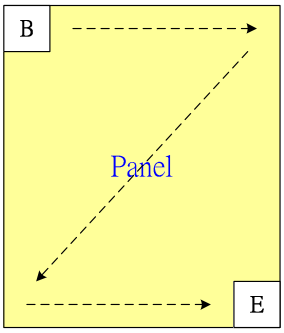

Fig. 9.12.1 Data streaming order

9.12.1.1 When 128RGBx160 (GM='00')

MV	MX	MV	CASET	RASET
0	0	0	Direct to Physical Column Pointer	Direct to Physical Row Pointer
0	0	1	Direct to Physical Column Pointer	Direct to (159-Physical Row Pointer)
0	1	0	Direct to (127-Physical Column Pointer)	Direct to Physical Row Pointer
0	1	1	Direct to (127-Physical Column Pointer)	Direct to (159-Physical Row Pointer)
1	0	0	Direct to Physical Row Pointer	Direct to Physical Column Pointer
1	0	1	Direct to (159-Physical Row Pointer)	Direct to Physical Column Pointer
1	1	0	Direct to Physical Row Pointer	Direct to (127-Physical Column Pointer)
1	1	1	Direct to (159-Physical Row Pointer)	Direct to (127-Physical Column Pointer)

9.12.1.2 When 120RGBx160 (GM='01')

MV	MX	MV	CASET	RASET
0	0	0	Direct to Physical Column Pointer	Direct to Physical Row Pointer
0	0	1	Direct to Physical Column Pointer	Direct to (159-Physical Row Pointer)
0	1	0	Direct to (119-Physical Column Pointer)	Direct to Physical Row Pointer
0	1	1	Direct to (119-Physical Column Pointer)	Direct to (159-Physical Row Pointer)
1	0	0	Direct to Physical Row Pointer	Direct to Physical Column Pointer
1	0	1	Direct to (159-Physical Row Pointer)	Direct to Physical Column Pointer
1	1	0	Direct to Physical Row Pointer	Direct to (119-Physical Column Pointer)
1	1	1	Direct to (159-Physical Row Pointer)	Direct to (119-Physical Column Pointer)

9.12.1.3 When 132RGBx162 (GM='11')

MV	MX	MV	CASET	RASET
0	0	0	Direct to Physical Column Pointer	Direct to Physical Row Pointer
0	0	1	Direct to Physical Column Pointer	Direct to (161-Physical Row Pointer)
0	1	0	Direct to (131-Physical Column Pointer)	Direct to Physical Row Pointer
0	1	1	Direct to (131-Physical Column Pointer)	Direct to (161-Physical Row Pointer)
1	0	0	Direct to Physical Row Pointer	Direct to Physical Column Pointer
1	0	1	Direct to (161-Physical Row Pointer)	Direct to Physical Column Pointer
1	1	0	Direct to Physical Row Pointer	Direct to (131-Physical Column Pointer)
1	1	1	Direct to (161-Physical Row Pointer)	Direct to (131-Physical Column Pointer)

Note: Data is always written to the Frame Memory in the same order, regardless of the Memory Write Direction set by MADCTL bits B7 (MY), B6 (MX), B5 (MV). The write order for each pixel unit is

D17	D16	D15	D14	D13	D12	D11	D10	D9	D8	D7	D6	D5	D4	D3	D2	D1	D0
R5	R4	R3	R2	R1	R0	G5	G4	G3	G2	G1	G0	B5	B4	B3	B2	B1	B0

One pixel unit represents 1 column and 1page counter value on the Frame Memory.

9.12.2 Frame Data Write Direction According to the MADCTL parameters (MV, MX and MY)

Display Data Direction	MADCTL Parameter			Image in the Host (MPU)	Image in the Driver (DDRAM)
	MV	MX	MY		
Normal	0	0	0	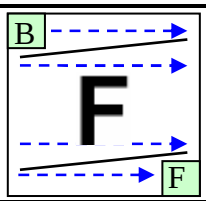	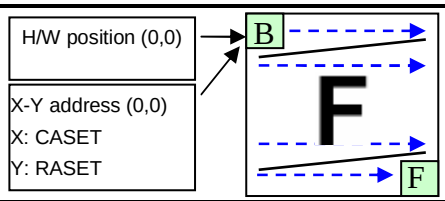
Y-Mirror	0	0	1	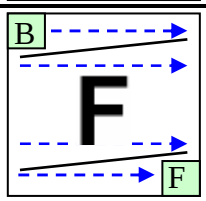	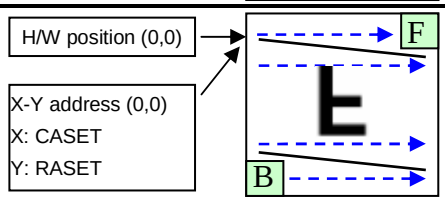
X-Mirror	0	1	0	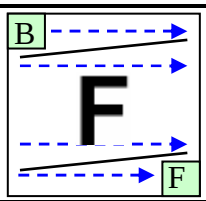	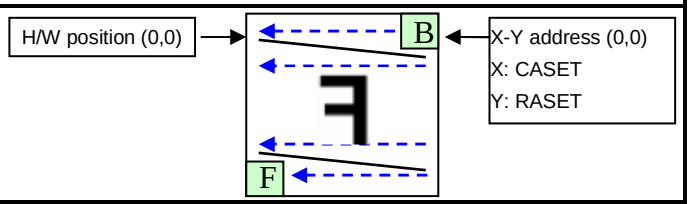
X-Mirror Y-Mirror	0	1	1	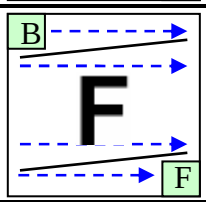	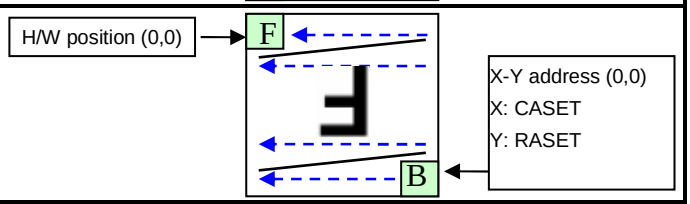
X-Y Exchange	1	0	0	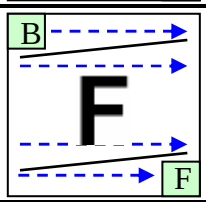	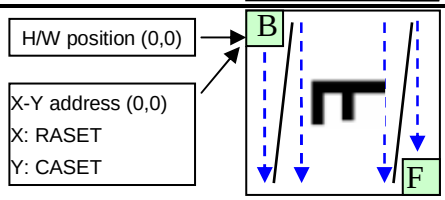
X-Y Exchange Y-Mirror	1	0	1	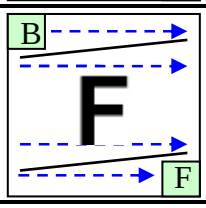	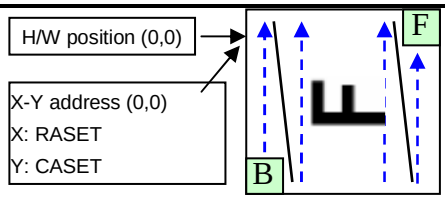
X-Y Exchange X-Mirror	1	1	0	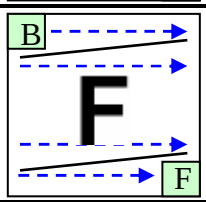	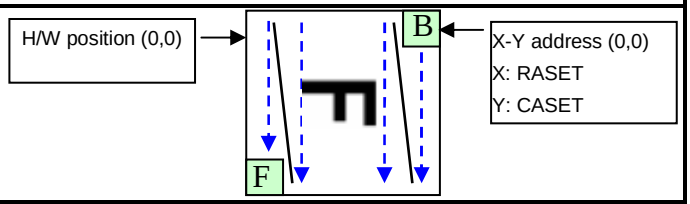
X-Y Exchange X-Mirror Y-Mirror	1	1	1	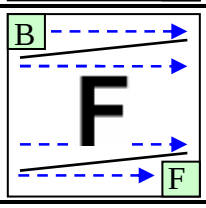	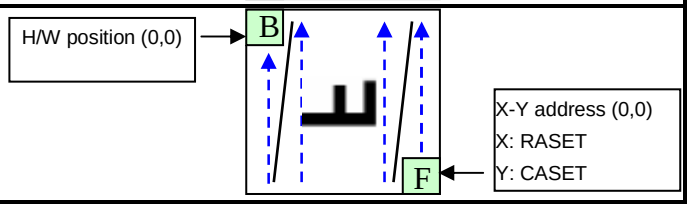

9.13 Tearing Effect Output Line

The Tearing Effect output line supplies to the MPU a Panel synchronization signal. This signal can be enabled or disabled by the Tearing Effect Line Off & On commands. The mode of the Tearing Effect signal is defined by the parameter of the Tearing Effect Line On command. The signal can be used by the MPU to synchronize Frame Memory Writing when displaying video images.

9.13.1 Tearing Effect Line Modes

Mode 1, the Tearing Effect Output signal consists of V-Blanking Information only:

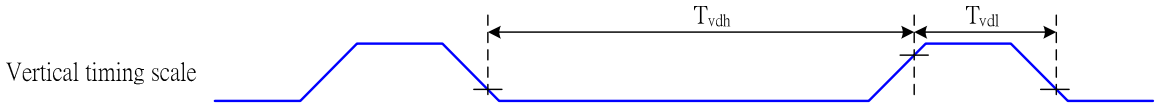

tvdh= The LCD display is not updated from the Frame Memory
tvdl= The LCD display is updated from the Frame Memory (except Invisible Line – see below)

Mode 2, the Tearing Effect Output signal consists of V-Blanking and H-Blanking Information, there is one V-sync and 162 H-sync pulses per field.

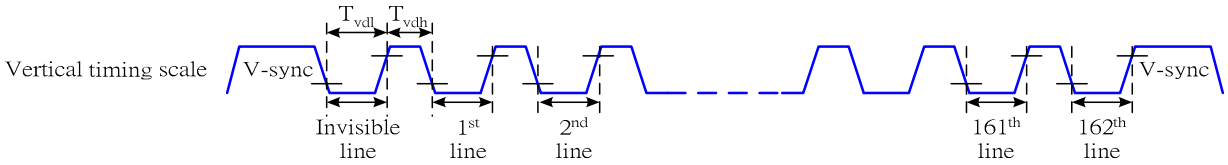

thdh= The LCD display is not updated from the Frame Memory
thdl= The LCD display is updated from the Frame Memory (except Invisible Line – see above)

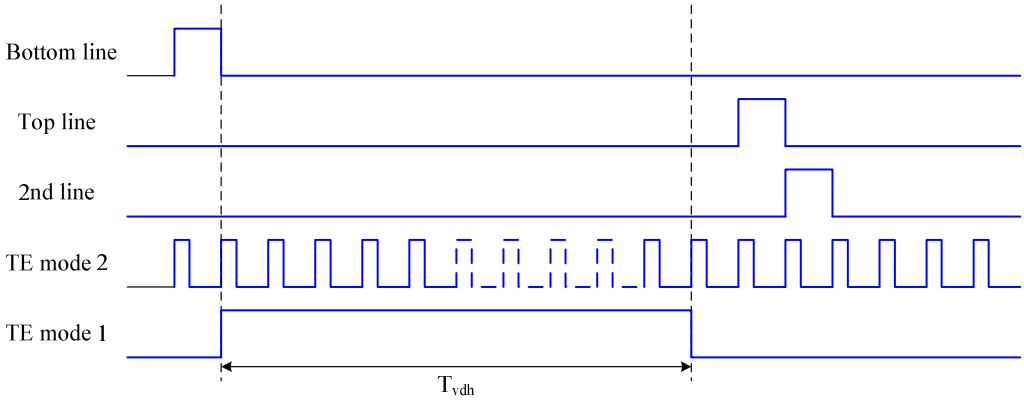

Note: During Sleep In Mode, the Tearing Output Pin is active Low.

9.13.2 Tearing Effect Line Timings

The Tearing Effect signal is described below:

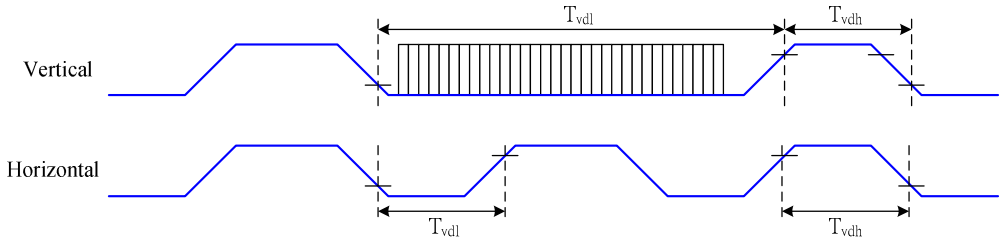

Table 9.13.1 AC characteristics of Tearing Effect Signal Idle Mode Off (Frame Rate = 58.9 Hz)

Symbol	Parameter	min	max	unit	description
t_{vdl}	Vertical Timing Low Duration	13	-	ms	
t_{vdh}	Vertical Timing High Duration	1000	-	µs	
t_{hdl}	Horizontal Timing Low Duration	33	-	µs	
t_{hdh}	Horizontal Timing Low Duration	25	500	µs	

NOTE: The timings in Table 9.3.1 apply when MADCTL ML=0 and ML=1

The signal's rise and fall times (tf, tr) are stipulated to be equal to or less than 15ns.

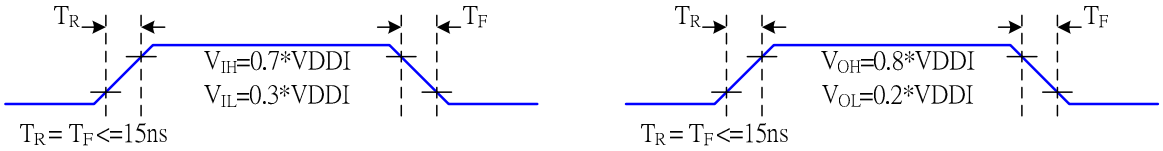

The Tearing Effect Output Line is fed back to the MPU and should be used as shown below to avoid Tearing Effect:

9.13.3 Example 1: MPU Write is faster than panel read

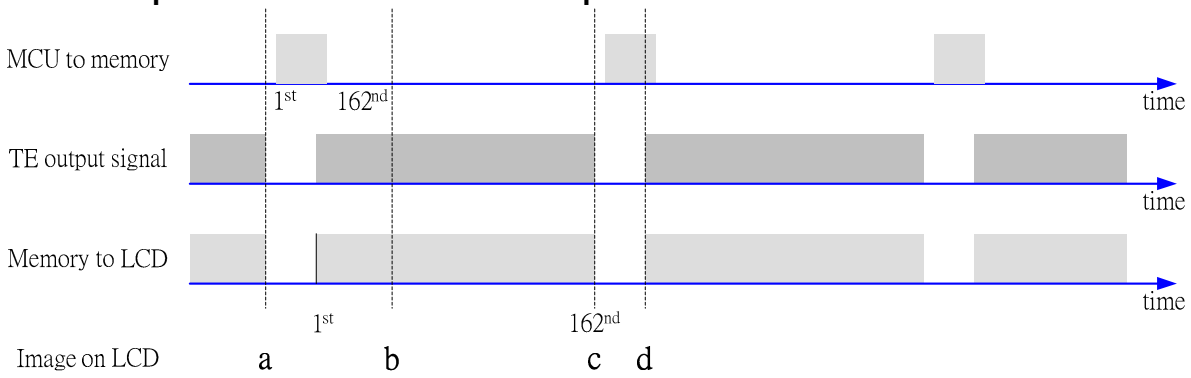

Data write to Frame Memory is now synchronized to the Panel Scan. It should be written during the vertical sync pulse of the Tearing Effect Output Line. This ensures that data is always written ahead of the panel scan and each Panel Frame refresh has a complete new image:

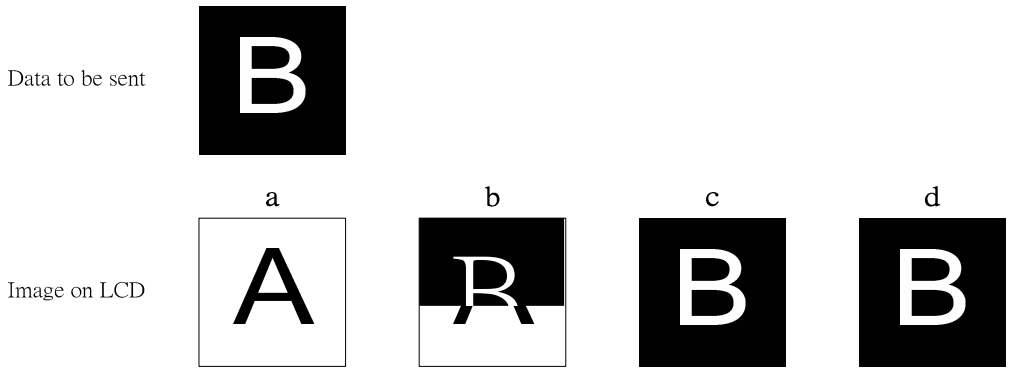

9.13.4 Example 2: MPU write is slower than panel read.

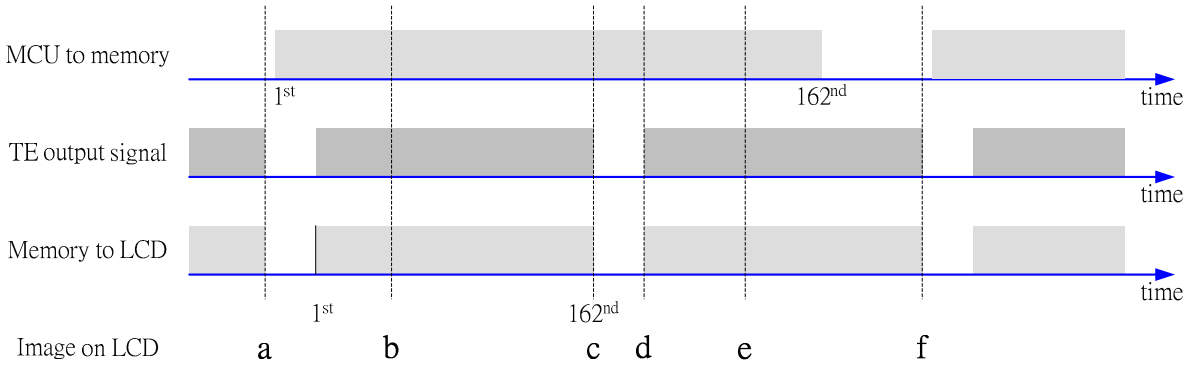

The MPU to Frame Memory write begins just after Panel Read has commenced i.e. after one horizontal sync pulse of the Tearing Effect Output Line. This allows time for the image to download behind the Panel Read pointer and finishing download during the subsequent Frame before the Read Pointer “catches” the MPU to Frame memory write position.

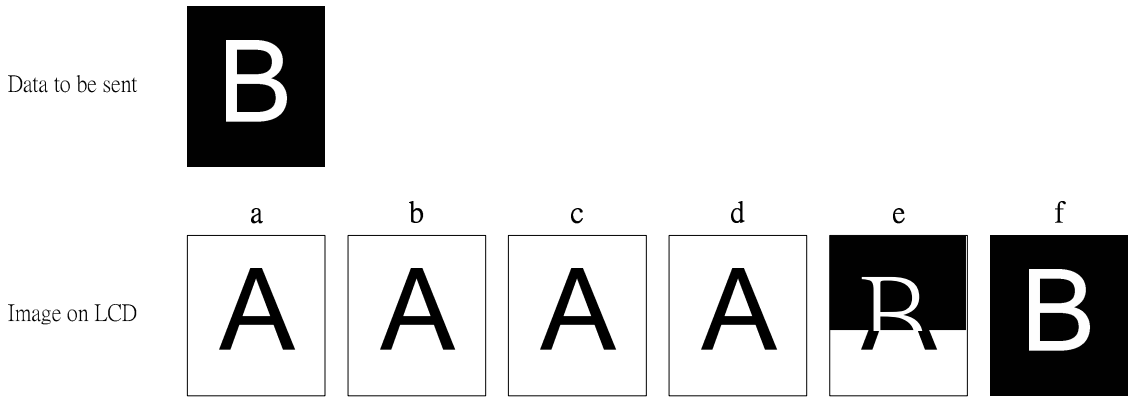

9.14 Preset Values

ST7732 will set preset values on our production line for each display module. Any of these preset values do not need customer's SW support.

9.15 Power ON/OFF Sequence

The power on/off sequence is illustrated below:

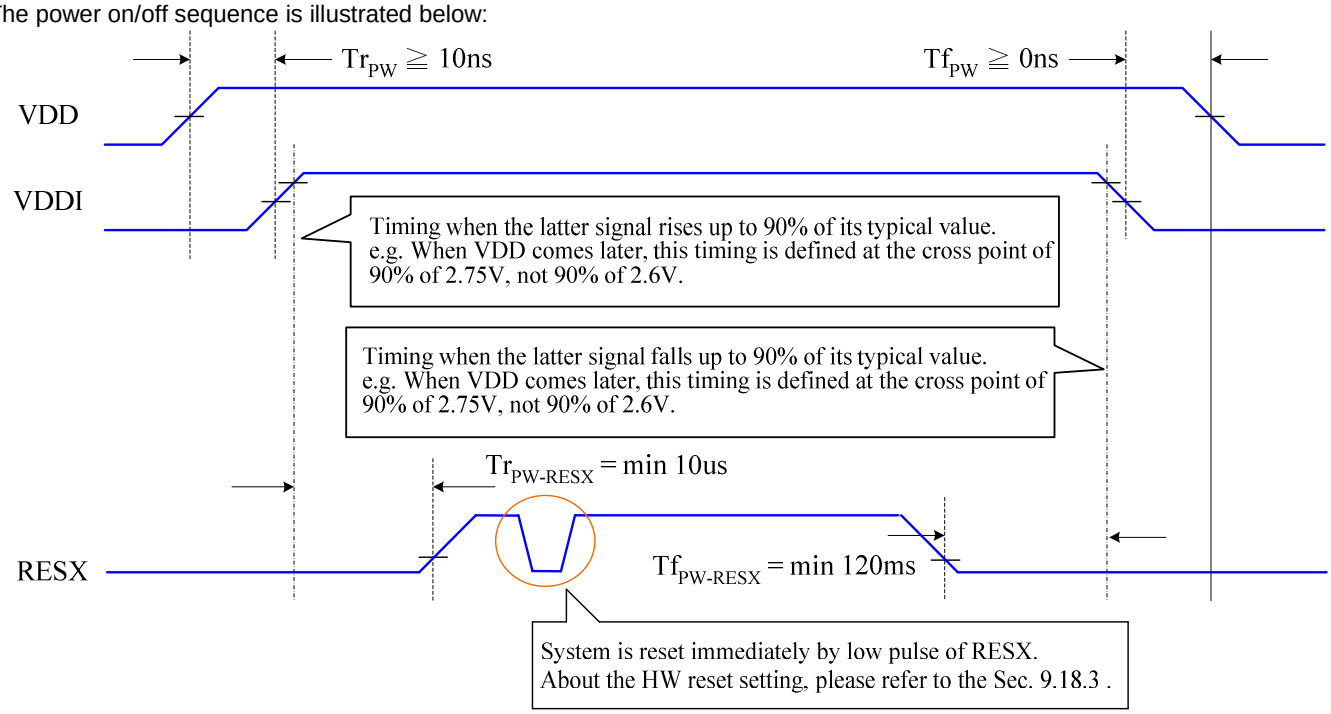

9.15.1 Uncontrolled Power Off

The uncontrolled power-off means a situation which removed a battery without the controlled power off sequence. It will neither damage the module or the host interface.

If uncontrolled power-off happened, the display will go blank and there will not any visible effect on the display (blank display) and remains blank until "Power On Sequence" powers it up.

9.16 Power Level Definition

9.16.1 Power Level

6 level modes are defined they are in order of Maximum Power consumption to Minimum Power Consumption:

1. Normal Mode On (full display), Idle Mode Off, Sleep Out.
In this mode, the display is able to show maximum 262,144 colors.
2. Partial Mode On, Idle Mode Off, Sleep Out.
In this mode part of the display is used with maximum 262,144 colors.
3. Normal Mode On (full display), Idle Mode On, Sleep Out.
In this mode, the full display area is used but with 8 colors.
4. Partial Mode On, Idle Mode On, Sleep Out.
In this mode, part of the display is used but with 8 colors.
5. Sleep In Mode
In this mode, the DC: DC converter, internal oscillator and panel driver circuit are stopped. Only the MCU interface and memory works with VDDI power supply. Contents of the memory are safe.
6. Power Off Mode
In this mode, both VDD and VDDI are removed.

Note: Transition between modes 1-5 is controllable by MCU commands. Mode 6 is entered only when both Power supplies are removed.

9.16.2 Power Flow Chart

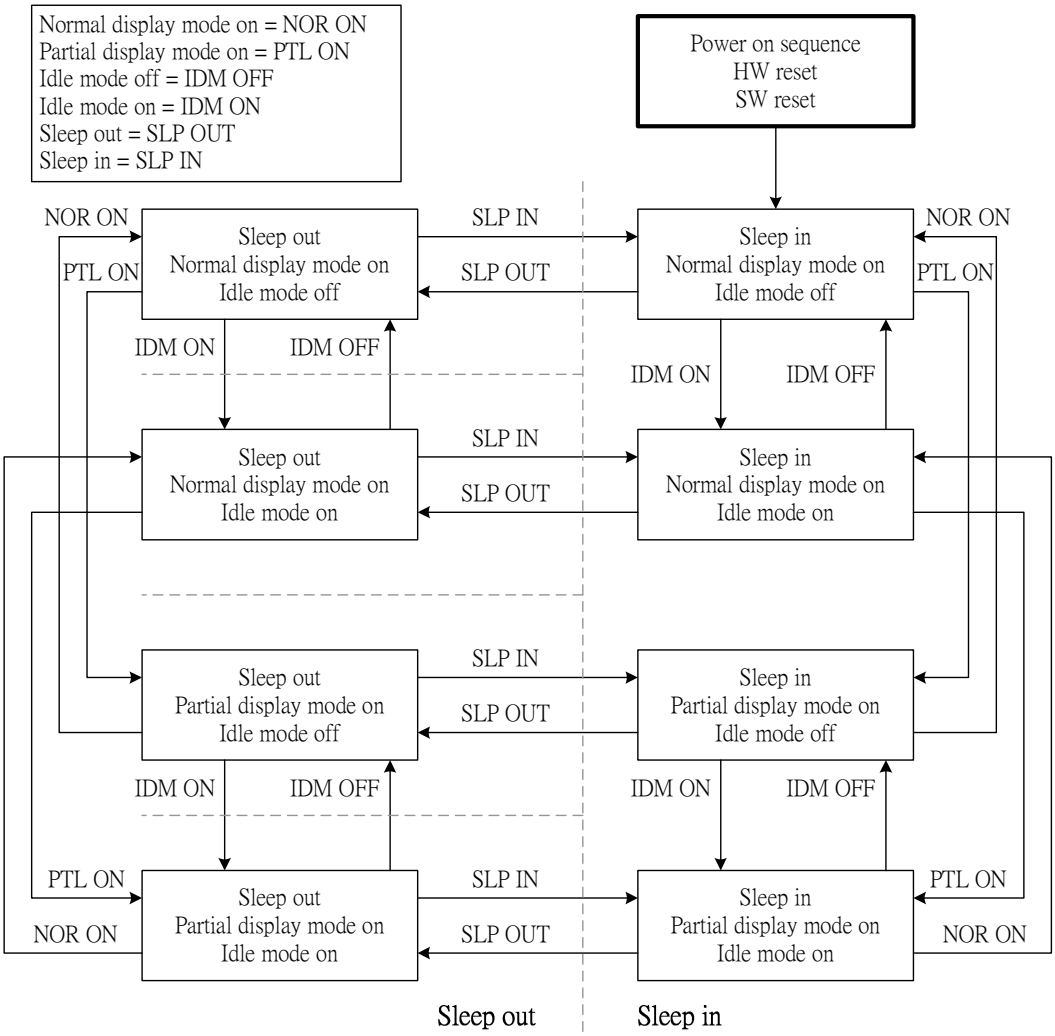

9.17 Reset Table

9.17.1 Reset Table (Default Value, GM=00, 128RGB x 160)

Item	After Power On	After Hardware Reset	After Software Reset
Frame memory	Random	No Change	No Change
Sleep In/Out	In	In	In
Display On/Off	Off	Off	Off
Display mode (normal/partial)	Normal	Normal	Normal
Display Inversion On/Off	Off	Off	Off
Display Idle Mode On/Off	Off	Off	Off
Column: Start Address (XS)	0000h	0000h	0000h
Column: End Address (XE)	007Fh	007Fh	007Fh (127d) (when MV=0) 009Fh (159d) (when MV=1)
Row: Start Address (YS)	0000h	0000h	0000h
Row: End Address (YE)	009Fh	009Fh	009Fh (159d) (when MV=0) 007Fh (127d) (when MV=1)
Gamma setting	GC0	GC0	GC0
RGB for 256, 4k and 65k Color Mode	See Section 9.19	See Section 9.19	No Change
Partial: Start Address (PSL)	0000h	0000h	0000h
Partial: End Address (PEL)	009Fh	009Fh	009Fh
Scroll: Vertical scrolling	Off	Off	Off
Scroll: Top Fixed Area (TFA)	0000h	0000h	0000h
Scroll: Scroll Area (VSA)	00A0h	00A0h	00A0h
Scroll: Bottom Fixed Area (BFA)	0000h	0000h	0000h
Scroll Start Address (SSA)	0000h	0000h	0000h
Tearing: On/Off	Off	Off	Off
Tearing Effect Mode (*1)	0 (Mode1)	0 (Mode1)	0 (Mode1)
Memory Data Access Control (MY/MX/MV/ML/RGB)	0/0/0/0/0	0/0/0/0/0	No Change
Interface Pixel Color Format	6 (18-Bit/Pixel)	6 (18-Bit/Pixel)	No Change
RDDPM	08h	08h	08h
RDDMADCTL	00h	00h	No Change
RDDCOLMOD	6 (18-Bit/Pixel)	6 (18-Bit/Pixel)	No Change
RDDIM	00h	00h	00h
RDDSM	00h	00h	00h
RDDSDR	00h	00h	00h
ID2	NV value	NV value	NV value
ID3	NV value	NV value	NV value

Note1. TE Mode 1 means Tearing Effect Output Line consists of V-Blanking Information only.

9.17.2 Reset Table (GM=01, 120RGB x 160)

Item	After Power On	After Hardware Reset	After Software Reset
Frame memory	Random	No Change	No Change
Sleep In/Out	In	In	In
Display On/Off	Off	Off	Off
Display mode (normal/partial)	Normal	Normal	Normal
Display Inversion On/Off	Off	Off	Off
Display Idle Mode On/Off	Off	Off	Off
Column: Start Address (XS)	0000h	0000h	0000h
Column: End Address (XE)	0077h	0077h	0077h (119d) (when MV=0) 009Fh (159d) (when MV=1)
Row: Start Address (YS)	0000h	0000h	0000h
Row: End Address (YE)	009Fh	009Fh	009Fh (159d) (when MV=0) 0077h (119d) (when MV=1)
Gamma setting	GC0	GC0	GC0
RGB for 256, 4k and 65k Color Mode	See Section 9.19	See Section 9.19	No Change
Partial: Start Address (PSL)	0000h	0000h	0000h
Partial: End Address (PEL)	009Fh	009Fh	009Fh
Scroll: Vertical scrolling	Off	Off	Off
Scroll: Top Fixed Area (TFA)	0000h	0000h	0000h
Scroll: Scroll Area (VSA)	00A0h	00A0h	00A0h
Scroll: Bottom Fixed Area (BFA)	0000h	0000h	0000h
Scroll Start Address (SSA)	0000h	0000h	0000h
Tearing: On/Off	Off	Off	Off
Tearing Effect Mode (*1)	0 (Mode1)	0 (Mode1)	0 (Mode1)
Memory Data Access Control (MY/MX/MV/ML/RGB)	0/0/0/0/0	0/0/0/0/0	No Change
Interface Pixel Color Format	6 (18-Bit/Pixel)	6 (18-Bit/Pixel)	No Change
RDDPM	08h	08h	08h
RDDMADCTL	00h	00h	No Change
RDDCOLMOD	6 (18-Bit/Pixel)	6 (18-Bit/Pixel)	No Change
RDDIM	00h	00h	00h
RDDSM	00h	00h	00h
RDDSDR	00h	00h	00h
ID2	NV value	NV value	NV value
ID3	NV value	NV value	NV value

Note1. TE Mode 1 means Tearing Effect Output Line consists of V-Blanking Information only.

9.17.3 Reset Table (GM=11, 132RGB x 162)

Item	After Power On	After Hardware Reset	After Software Reset
Frame memory	Random	No Change	No Change
Sleep In/Out	In	In	In
Display On/Off	Off	Off	Off
Display mode (normal/partial)	Normal	Normal	Normal
Display Inversion On/Off	Off	Off	Off
Display Idle Mode On/Off	Off	Off	Off
Column: Start Address (XS)	0000h	0000h	0000h
Column: End Address (XE)	0083h	0083h	0083h (131d) (when MV=0) 00A1h (161d) (when MV=1)
Row: Start Address (YS)	0000h	0000h	0000h
Row: End Address (YE)	00A1h	00A1h	00A1h (161d) (when MV=0) 0083h (131d) (when MV=1)
Gamma setting	GC0	GC0	GC0
RGB for 256, 4k and 65k Color Mode	See Section 9.19	See Section 9.19	No Change
Partial: Start Address (PSL)	0000h	0000h	0000h
Partial: End Address (PEL)	00A1h	00A1h	00A1h
Scroll: Vertical scrolling	Off	Off	Off
Scroll: Top Fixed Area (TFA)	0000h	0000h	0000h
Scroll: Scroll Area (VSA)	00A2h	00A2h	00A2h
Scroll: Bottom Fixed Area (BFA)	0000h	0000h	0000h
Scroll Start Address (SSA)	0000h	0000h	0000h
Tearing: On/Off	Off	Off	Off
Tearing Effect Mode (*1)	0 (Mode1)	0 (Mode1)	0 (Mode1)
Memory Data Access Control (MY/MX/MV/ML/RGB)	0/0/0/0/0	0/0/0/0/0	No Change
Interface Pixel Color Format	6 (18-Bit/Pixel)	6 (18-Bit/Pixel)	No Change
RDDPM	08h	08h	08h
RDDMADCTL	00h	00h	No Change
RDDCOLMOD	6 (18-Bit/Pixel)	6 (18-Bit/Pixel)	No Change
RDDIM	00h	00h	00h
RDDSM	00h	00h	00h
RDDSDR	00h	00h	00h
ID2	NV value	NV value	NV value
ID3	NV value	NV value	NV value

Note 1. TE Mode 1 means Tearing Effect Output Line consists of V-Blanking Information only.

9.18 Module Input/Output Pins

9.18.1 Output or Bi-directional (I/O) Pins

Output or Bi-directional pins	After Power On	After Hardware Reset	After Software Reset
TE	Low	Low	Low
D7 to D0 (Output driver)	High-Z (Inactive)	High-Z (Inactive)	High-Z (Inactive)

Note: There will be no output from D7-D0 during Power On/Off sequence, Hardware Reset and Software Reset.

9.18.2 Input Pins

Input pins	During Power On Process	After Power On	After Hardware Reset	After Software Reset	During Power Off Process
RESX	See 9.15	Input valid	Input valid	Input valid	See 9.15
CSX	Input invalid	Input valid	Input valid	Input valid	Input invalid
D/CX	Input invalid	Input valid	Input valid	Input valid	Input invalid
WRX	Input invalid	Input valid	Input valid	Input valid	Input invalid
RDX	Input invalid	Input valid	Input valid	Input valid	Input invalid
D7 to D0	Input invalid	Input valid	Input valid	Input valid	Input invalid

9.18.3 Reset Timing

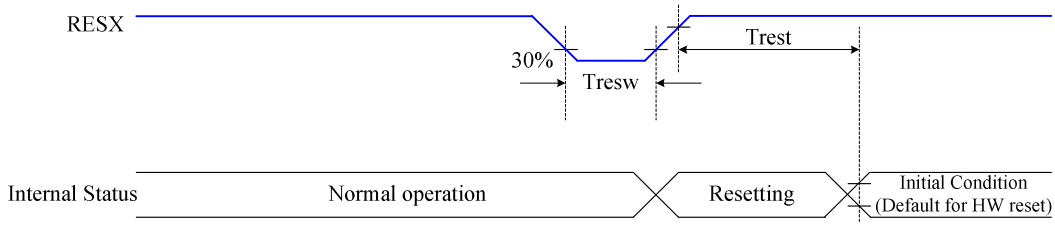

Table 9.18.2.1 Reset input timing
VSS=0V, VDDI=1.65V to 1.95V, VDD=2.5V to 2.9V, Ta = -30 to 70℃)

Symbol	Parameter	Related Pins	MIN	TYP	MAX	Note	Unit
t_{RESW}	*1) Reset low pulse width	RESX	10	-	-	-	us
t_{REST}	*2) Reset complete time	-	120	-	-	-	ms

Note 1 Spike due to an electrostatic discharge on RESX line does not cause irregular system reset according to the table below.
Note 2.It will be necessary to wait 120 msec before sending next command; this is allowing time for the supply voltages and clock circuits to stabilize.

Note 3 During Reset Complete Time, ID2 and VCOMOF value in OTP will be latched to internal register during this period.This loading is done every time when there is H/W reset complete time (tREST) within 120ms after a rising edge of RESX.

Note 4 Spike Rejection also applies during a valid reset pulse as shown below:

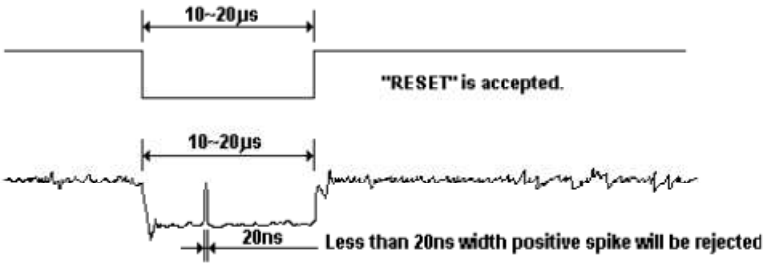

9.19 Color Depth Conversion Look Up Tables

9.19.1 65536 Color to 262,144 Color

Color	Look Up Table Output Frame Memory Data (6-bits)	Default value after H/W Reset	RGBSET Parameter	Look Up Table Input Data 65k Color (5-bits)
RED	R_{005} R_{004} R_{003} R_{002} R_{001} R_{000}	000000	1	00000
	R_{015} R_{014} R_{013} R_{012} R_{011} R_{010}	000010	2	00001
	R_{025} R_{024} R_{023} R_{022} R_{021} R_{020}	000100	3	00010
	R_{035} R_{034} R_{033} R_{032} R_{031} R_{030}	000110	4	00011
	R_{045} R_{044} R_{043} R_{042} R_{041} R_{040}	001000	5	00100
	R_{055} R_{054} R_{053} R_{052} R_{051} R_{050}	001010	6	00101
	R_{065} R_{064} R_{063} R_{062} R_{061} R_{060}	001100	7	00110
	R_{075} R_{074} R_{073} R_{072} R_{071} R_{070}	001110	8	00111
	R_{085} R_{084} R_{083} R_{082} R_{081} R_{080}	010000	9	01000
	R_{095} R_{094} R_{093} R_{092} R_{091} R_{090}	010010	10	01001
	R_{105} R_{104} R_{103} R_{102} R_{101} R_{100}	010100	11	01010
	R_{115} R_{114} R_{113} R_{112} R_{111} R_{110}	010110	12	01011
	R_{125} R_{124} R_{123} R_{122} R_{121} R_{120}	011000	13	01100
	R_{135} R_{134} R_{133} R_{132} R_{131} R_{130}	011010	14	01101
	R_{145} R_{144} R_{143} R_{142} R_{141} R_{140}	011100	15	01110
	R_{155} R_{154} R_{153} R_{152} R_{151} R_{150}	011110	16	01111
	R_{165} R_{164} R_{163} R_{162} R_{161} R_{160}	100001	17	10000
	R_{175} R_{174} R_{173} R_{172} R_{171} R_{170}	100011	18	10001
	R_{185} R_{184} R_{183} R_{182} R_{181} R_{180}	100101	19	10010
	R_{195} R_{194} R_{193} R_{192} R_{191} R_{190}	100111	20	10011
	R_{205} R_{204} R_{203} R_{202} R_{201} R_{200}	101001	21	10100
	R_{215} R_{214} R_{213} R_{212} R_{211} R_{210}	101011	22	10101
	R_{225} R_{224} R_{223} R_{222} R_{221} R_{220}	101101	23	10110
	R_{235} R_{234} R_{233} R_{232} R_{231} R_{230}	101111	24	10111
	R_{245} R_{244} R_{243} R_{242} R_{241} R_{240}	110001	25	11000
	R_{255} R_{254} R_{253} R_{252} R_{251} R_{250}	110011	26	11001
	R_{265} R_{264} R_{263} R_{262} R_{261} R_{260}	110101	27	11010
	R_{275} R_{274} R_{273} R_{272} R_{271} R_{270}	110111	28	11011
	R_{285} R_{284} R_{283} R_{282} R_{281} R_{280}	111001	29	11100
	R_{295} R_{294} R_{293} R_{292} R_{291} R_{290}	111011	30	11101
	R_{305} R_{304} R_{303} R_{302} R_{301} R_{300}	111101	31	11110
	R_{315} R_{314} R_{313} R_{312} R_{311} R_{310}	111111	32	11111

Color	Look Up Table Output Frame Memory Data (6-bits)	Default value after H/W Reset	RGBSET Parameter	Look Up Table Input Data 65k Color (5-bits)
GREEN	G_{005} G_{004} G_{003} G_{002} G_{001} G_{000}	000000	33	000000
	G_{015} G_{014} G_{013} G_{012} G_{011} G_{010}	000001	34	000001
	G_{025} G_{024} G_{023} G_{022} G_{021} G_{020}	000010	35	000010
	G_{035} G_{034} G_{033} G_{032} G_{031} G_{030}	000011	36	000011
	G_{045} G_{044} G_{043} G_{042} G_{041} G_{040}	000100	37	000100
	G_{055} G_{054} G_{053} G_{052} G_{051} G_{050}	000101	38	000101
	G_{065} G_{064} G_{063} G_{062} G_{061} G_{060}	000110	39	000110
	G_{075} G_{074} G_{073} G_{072} G_{071} G_{070}	000111	40	000111
	G_{085} G_{084} G_{083} G_{082} G_{081} G_{080}	001000	41	001000
	G_{095} G_{094} G_{093} G_{092} G_{091} G_{090}	001001	42	001001
	G_{105} G_{104} G_{103} G_{102} G_{101} G_{100}	001010	43	001010
	G_{115} G_{114} G_{113} G_{112} G_{111} G_{110}	001011	44	001011
	G_{125} G_{124} G_{123} G_{122} G_{121} G_{120}	001100	45	001100
	G_{135} G_{134} G_{133} G_{132} G_{131} G_{130}	001101	46	001101
	G_{145} G_{144} G_{143} G_{142} G_{141} G_{140}	001110	47	001110
	G_{155} G_{154} G_{153} G_{152} G_{151} G_{150}	001111	48	001111
	G_{165} G_{164} G_{163} G_{162} G_{161} G_{160}	010000	49	010000
	G_{175} G_{174} G_{173} G_{172} G_{171} G_{170}	010001	50	010001
	G_{185} G_{184} G_{183} G_{182} G_{181} G_{180}	010010	51	010010
	G_{195} G_{194} G_{193} G_{192} G_{191} G_{190}	010011	52	010011
	G_{205} G_{204} G_{203} G_{202} G_{201} G_{200}	010100	53	010100
	G_{215} G_{214} G_{213} G_{212} G_{211} G_{210}	010101	54	010101
	G_{225} G_{224} G_{223} G_{222} G_{221} G_{220}	010110	55	010110
	G_{235} G_{234} G_{233} G_{232} G_{231} G_{230}	010111	56	010111
	G_{245} G_{244} G_{243} G_{242} G_{241} G_{240}	011000	57	011000
	G_{255} G_{254} G_{253} G_{252} G_{251} G_{250}	011001	58	011001
	G_{265} G_{264} G_{263} G_{262} G_{261} G_{260}	011010	59	011010
	G_{275} G_{274} G_{273} G_{272} G_{271} G_{270}	011011	60	011011
	G_{285} G_{284} G_{283} G_{282} G_{281} G_{280}	011100	61	011100
	G_{295} G_{294} G_{293} G_{292} G_{291} G_{290}	011101	62	011101
	G_{305} G_{304} G_{303} G_{302} G_{301} G_{300}	011110	63	011110
	G_{315} G_{314} G_{313} G_{312} G_{311} G_{310}	011111	64	011111

Color	Look Up Table Output Frame Memory Data (6-bits)	Default value after H/W Reset	RGBSET Parameter	Look Up Table Input Data 65k Color (5-bits)
GREEN	G_{325} G_{324} G_{323} G_{322} G_{321} G_{320}	100000	65	100000
	G_{335} G_{334} G_{333} G_{332} G_{331} G_{330}	100001	66	100001
	G_{345} G_{344} G_{343} G_{342} G_{341} G_{340}	100010	67	100010
	G_{355} G_{354} G_{353} G_{352} G_{351} G_{350}	100011	68	100011
	G_{365} G_{364} G_{363} G_{362} G_{361} G_{360}	100100	69	100100
	G_{375} G_{374} G_{373} G_{372} G_{371} G_{370}	100101	70	100101
	G_{385} G_{384} G_{383} G_{382} G_{381} G_{380}	100110	71	100110
	G_{395} G_{394} G_{393} G_{392} G_{391} G_{390}	100111	72	100111
	G_{405} G_{404} G_{403} G_{402} G_{401} G_{400}	101000	73	101000
	G_{415} G_{414} G_{413} G_{412} G_{411} G_{410}	101001	74	101001
	G_{425} G_{424} G_{423} G_{422} G_{421} G_{420}	101010	75	101010
	G_{435} G_{434} G_{433} G_{432} G_{431} G_{430}	101011	76	101011
	G_{445} G_{444} G_{443} G_{442} G_{441} G_{440}	101100	77	101100
	G_{455} G_{454} G_{453} G_{452} G_{451} G_{450}	101101	78	101101
	G_{465} G_{464} G_{463} G_{462} G_{461} G_{460}	101110	79	101110
	G_{475} G_{474} G_{473} G_{472} G_{471} G_{470}	101111	80	101111
	G_{485} G_{484} G_{483} G_{482} G_{481} G_{480}	110000	81	110000
	G_{495} G_{494} G_{493} G_{492} G_{491} G_{490}	110001	82	110001
	G_{505} G_{504} G_{503} G_{502} G_{501} G_{500}	110010	83	110010
	G_{515} G_{514} G_{513} G_{512} G_{511} G_{510}	110011	84	110011
	G_{525} G_{524} G_{523} G_{522} G_{521} G_{520}	110100	85	110100
	G_{535} G_{534} G_{533} G_{532} G_{531} G_{530}	110101	86	110101
	G_{545} G_{544} G_{543} G_{542} G_{541} G_{540}	110110	87	110110
	G_{555} G_{554} G_{553} G_{552} G_{551} G_{550}	110111	88	110111
	G_{565} G_{564} G_{563} G_{562} G_{561} G_{560}	111000	89	111000
	G_{575} G_{574} G_{573} G_{572} G_{571} G_{570}	111001	90	111001
	G_{585} G_{584} G_{583} G_{582} G_{581} G_{580}	111010	91	111010
	G_{595} G_{594} G_{593} G_{592} G_{591} G_{590}	111011	92	111011
	G_{605} G_{604} G_{603} G_{602} G_{601} G_{600}	111100	93	111100
	G_{615} G_{614} G_{613} G_{612} G_{611} G_{610}	111101	94	111101
	G_{625} G_{624} G_{623} G_{622} G_{621} G_{620}	111110	95	111110
	G_{635} G_{634} G_{633} G_{632} G_{631} G_{630}	111111	96	111111

Color	Look Up Table Output Frame Memory Data (6-bits)	Default value after H/W Reset	RGBSET Parameter	Look Up Table Input Data 65k Color (5-bits)
BLUE	B_{005} B_{004} B_{003} B_{002} B_{001} B_{000}	000000	97	00000
	B_{015} B_{014} B_{013} B_{012} B_{011} B_{010}	000010	98	00001
	B_{025} B_{024} B_{023} B_{022} B_{021} B_{020}	000100	99	00010
	B_{035} B_{034} B_{033} B_{032} B_{031} B_{030}	000110	100	00011
	B_{045} B_{044} B_{043} B_{042} B_{041} B_{040}	001000	101	00100
	B_{055} B_{054} B_{053} B_{052} B_{051} B_{050}	001010	102	00101
	B_{065} B_{064} B_{063} B_{062} B_{061} B_{060}	001100	103	00110
	B_{075} B_{074} B_{073} B_{072} B_{071} B_{070}	001110	104	00111
	B_{085} B_{084} B_{083} B_{082} B_{081} B_{080}	010000	105	01000
	B_{095} B_{094} B_{093} B_{092} B_{091} B_{090}	010010	106	01001
	B_{105} B_{104} B_{103} B_{102} B_{101} B_{100}	010100	107	01010
	B_{115} B_{114} B_{113} B_{112} B_{111} B_{110}	010110	108	01011
	B_{125} B_{124} B_{123} B_{122} B_{121} B_{120}	011000	109	01100
	B_{135} B_{134} B_{133} B_{132} B_{131} B_{130}	011010	110	01101
	B_{145} B_{144} B_{143} B_{142} B_{141} B_{140}	011100	111	01110
	B_{155} B_{154} B_{153} B_{152} B_{151} B_{150}	011110	112	01111
	B_{165} B_{164} B_{163} B_{162} B_{161} B_{160}	100001	113	10000
	B_{175} B_{174} B_{173} B_{172} B_{171} B_{170}	100011	114	10001
	B_{185} B_{184} B_{183} B_{182} B_{181} B_{180}	100101	115	10010
	B_{195} B_{194} B_{193} B_{192} B_{191} B_{190}	100111	116	10011
	B_{205} B_{204} B_{203} B_{202} B_{201} B_{200}	101001	117	10100
	B_{215} B_{214} B_{213} B_{212} B_{211} B_{210}	101011	118	10101
	B_{225} B_{224} B_{223} B_{222} B_{221} B_{220}	101101	119	10110
	B_{235} B_{234} B_{233} B_{232} B_{231} B_{230}	101111	120	10111
	B_{245} B_{244} B_{243} B_{242} B_{241} B_{240}	110001	121	11000
	B_{255} B_{254} B_{253} B_{252} B_{251} B_{250}	110011	122	11001
	B_{265} B_{264} B_{263} B_{262} B_{261} B_{260}	110101	123	11010
	B_{275} B_{274} B_{273} B_{272} B_{271} B_{270}	110111	124	11011
	B_{285} B_{284} B_{283} B_{282} B_{281} B_{280}	111001	125	11100
	B_{295} B_{294} B_{293} B_{292} B_{291} B_{290}	111011	126	11101
	B_{305} B_{304} B_{303} B_{302} B_{301} B_{300}	111101	127	11110
	B_{315} B_{314} B_{313} B_{312} B_{311} B_{310}	111111	128	11111

9.19.1 4096 Color to 262,144 Color

Color	Look Up Table Output Frame Memory Data (6-bits)	Default value after H/W Reset	RGBSET Parameter	Look Up Table Input Data 4k Color (4-bits)
RED	R_{005} R_{004} R_{003} R_{002} R_{001} R_{000}	000000	1	0000
	R_{015} R_{014} R_{013} R_{012} R_{011} R_{010}	000100	2	0001
	R_{025} R_{024} R_{023} R_{022} R_{021} R_{020}	001000	3	0010
	R_{035} R_{034} R_{033} R_{032} R_{031} R_{030}	001100	4	0011
	R_{045} R_{044} R_{043} R_{042} R_{041} R_{040}	010001	5	0100
	R_{055} R_{054} R_{053} R_{052} R_{051} R_{050}	010101	6	0101
	R_{065} R_{064} R_{063} R_{062} R_{061} R_{060}	011001	7	0110
	R_{075} R_{074} R_{073} R_{072} R_{071} R_{070}	011101	8	0111
	R_{085} R_{084} R_{083} R_{082} R_{081} R_{080}	100010	9	1000
	R_{095} R_{094} R_{093} R_{092} R_{091} R_{090}	100110	10	1001
	R_{105} R_{104} R_{103} R_{102} R_{101} R_{100}	101010	11	1010
	R_{115} R_{114} R_{113} R_{112} R_{111} R_{110}	101110	12	1011
	R_{125} R_{124} R_{123} R_{122} R_{121} R_{120}	110011	13	1100
	R_{135} R_{134} R_{133} R_{132} R_{131} R_{130}	110111	14	1101
	R_{145} R_{144} R_{143} R_{142} R_{141} R_{140}	111011	15	1110
	R_{155} R_{154} R_{153} R_{152} R_{151} R_{150}	111111	16	1111
	R_{165} R_{164} R_{163} R_{162} R_{161} R_{160}	------	17	Not used
	|	|	|	
	R_{315} R_{314} R_{313} R_{312} R_{311} R_{310}	------	32	

Color	Look Up Table Output Frame Memory Data (6-bits)	Default value after H/W Reset	RGBSET Parameter	Look Up Table Input Data 4k Color (4-bits)
GREEN	G_{005} G_{004} G_{003} G_{002} G_{001} G_{000}	000000	33	0000
	G_{015} G_{014} G_{013} G_{012} G_{011} G_{010}	000100	34	0001
	G_{025} G_{024} G_{023} G_{022} G_{021} G_{020}	001000	35	0010
	G_{035} G_{034} G_{033} G_{032} G_{031} G_{030}	001100	36	0011
	G_{045} G_{044} G_{043} G_{042} G_{041} G_{040}	010001	37	0100
	G_{055} G_{054} G_{053} G_{052} G_{051} G_{050}	010101	38	0101
	G_{065} G_{064} G_{063} G_{062} G_{061} G_{060}	011001	39	0110
	G_{075} G_{074} G_{073} G_{072} G_{071} G_{070}	011101	40	0111
	G_{085} G_{084} G_{083} G_{082} G_{081} G_{080}	100010	41	1000
	G_{095} G_{094} G_{093} G_{092} G_{091} G_{090}	100110	42	1001
	G_{105} G_{104} G_{103} G_{102} G_{101} G_{100}	101010	43	1010
	G_{115} G_{114} G_{113} G_{112} G_{111} G_{110}	101110	44	1011
	G_{125} G_{124} G_{123} G_{122} G_{121} G_{120}	110011	45	1100
	G_{135} G_{134} G_{133} G_{132} G_{131} G_{130}	110111	46	1101
	G_{145} G_{144} G_{143} G_{142} G_{141} G_{140}	111011	47	1110
	G_{155} G_{154} G_{153} G_{152} G_{151} G_{150}	111111	48	1111
	G_{165} G_{164} G_{163} G_{162} G_{161} G_{160}	------	49	Not used
	|	|	|	
	G_{635} G_{634} G_{633} G_{632} G_{631} G_{630}	------	96	

Color	Look Up Table Output Frame Memory Data (6-bits)	Default value after H/W Reset	RGBSET Parameter	Look Up Table Input Data 4k Color (4-bits)
BLUE	B_{005} B_{004} B_{003} B_{002} B_{001} B_{000}	000000	97	0000
	B_{015} B_{014} B_{013} B_{012} B_{011} B_{010}	000100	98	0001
	B_{025} B_{024} B_{023} B_{022} B_{021} B_{020}	001000	99	0010
	B_{035} B_{034} B_{033} B_{032} B_{031} B_{030}	001100	100	0011
	B_{045} B_{044} B_{043} B_{042} B_{041} B_{040}	010001	101	0100
	B_{055} B_{054} B_{053} B_{052} B_{051} B_{050}	010101	102	0101
	B_{065} B_{064} B_{063} B_{062} B_{061} B_{060}	011001	103	0110
	B_{075} B_{074} B_{073} B_{072} B_{071} B_{070}	011101	104	0111
	B_{085} B_{084} B_{083} B_{082} B_{081} B_{080}	100010	105	1000
	B_{095} B_{094} B_{093} B_{092} B_{091} B_{090}	100110	106	1001
	B_{105} B_{104} B_{103} B_{102} B_{101} B_{100}	101010	107	1010
	B_{115} B_{114} B_{113} B_{112} B_{111} B_{110}	101110	108	1011
	B_{125} B_{124} B_{123} B_{122} B_{121} B_{120}	110011	109	1100
	B_{135} B_{134} B_{133} B_{132} B_{131} B_{130}	110111	110	1101
	B_{145} B_{144} B_{143} B_{142} B_{141} B_{140}	111011	111	1110
	B_{155} B_{154} B_{153} B_{152} B_{151} B_{150}	111111	112	1111
	B_{165} B_{164} B_{163} B_{162} B_{161} B_{160}	------	113	Not used
	|	|	|	
	B_{315} B_{314} B_{313} B_{312} B_{311} B_{310}	------	128	

9.20 Sleep Out-Command and Self-Diagnostic Functions of the Display Module

9.20.1 Register Loading Detection

Sleep Out-command (See section 10.1.12 “Sleep Out (11h)”) is a trigger for an internal function of the display module, which indicates, if the display module loading function of factory default values from EEPROM (or similar device) to registers of the display controller is working properly.

There are compared factory values of the EEPROM and register values of the display controller by the display controller. If those both values (EEPROM and register values) are same, there is inverted (=increased by 1) a bit, which is defined in command 10.1.10 “Read Display Self-Diagnostic Result (0Fh)” (=RDDSDR) (The used bit of this command is D7). If those both values are not same, this bit (D7) is not inverted (= increased by 1).

The flow chart for this internal function is following:

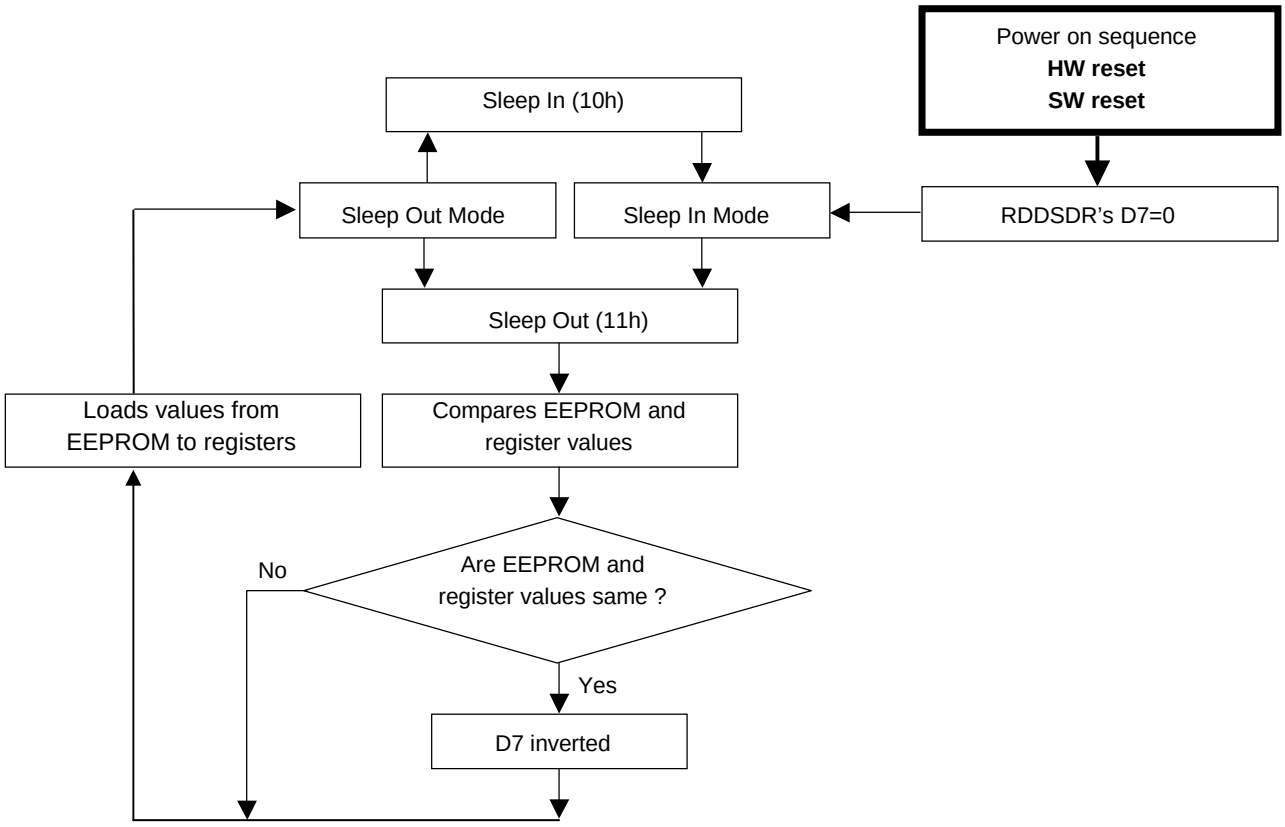

Note: There is not compared and loaded register values, which can be changed by user (00h to AFh and DAh to DDh), by the display module.

9.20.2 Functionality Detection

Sleep Out-command (See section 10.1.12 “Sleep Out (11h)”) is a trigger for an internal function of the display module, which indicates, if the display module is still running and meets functionality requirements.

The internal function (= the display controller) is comparing, if the display module is still meeting functionality requirements (only Booster voltage level). If functionality requirement is met, there is inverted (= increased by 1) a bit, which defined in command 10.1.10 “Read Display Self- Diagnostic Result (0Fh)” (= RDDSDR) (The used bit of this command is D6). If functionality requirement is not same, this bit (D6) is not inverted (= increased by 1).

The flow chart for this internal function is following:

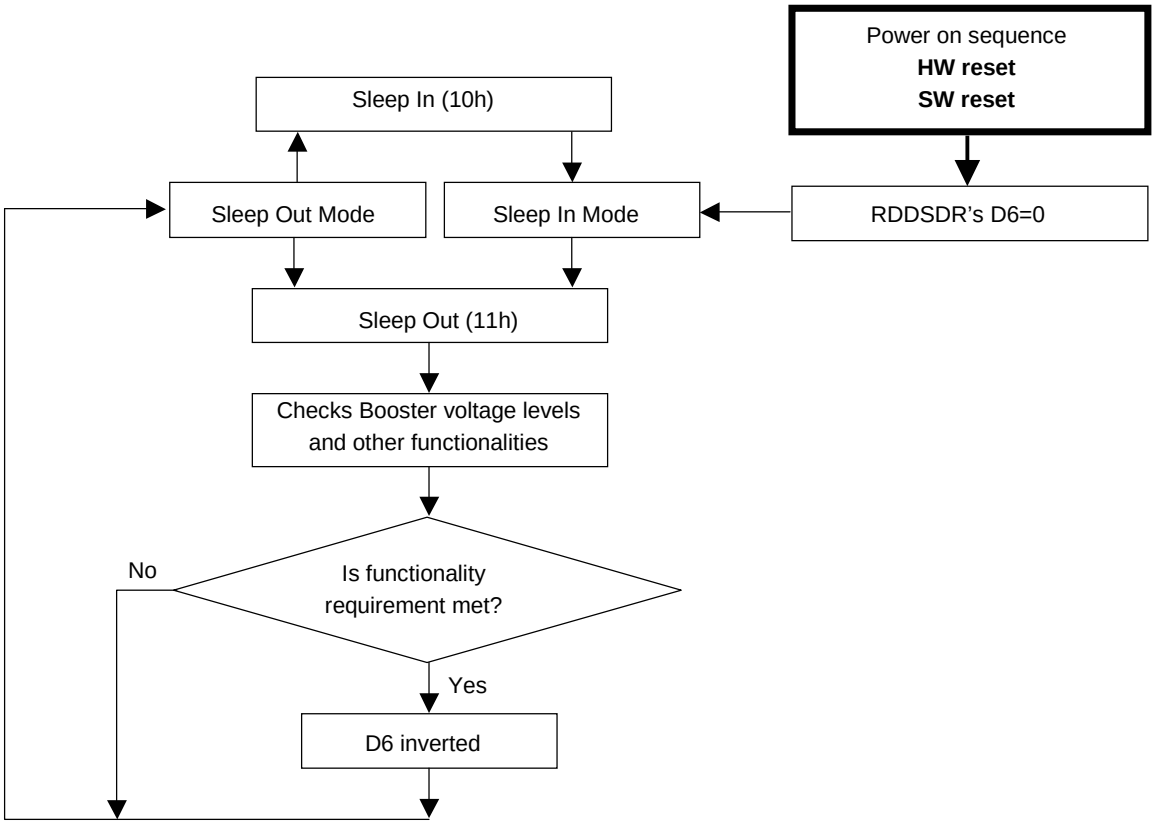

Note: There is needed 120msec after Sleep Out -command, when there is changing from Sleep In –mode to Sleep Out -mode, before there is possible to check if functionality requirements are met and a value of RDDSDR’s D6 is valid. Otherwise, there is 120msec delay for D6’s value, when Sleep Out –command is sent in Sleep Out -mode.

9.20.3 Chip Attachment Detection

Sleep Out-command (See section 10.1.12 “Sleep Out (11h)”) is a trigger for an internal function of the display module, which indicates, if a chip or chips (e.g. driver, etc.) of the display module is/are attached to the circuit route of a flex foil or display glass ITO.

There is inverted (= increased by 1) a bit, which is defined in command 10.1.10 “Read Display Self- Diagnostic Result (0Fh)” (= RDDSDR) (The used bit of this command is D5), if the chip or chips is/are attached to the circuit route of the flex or display glass. If this chip is or those chips are not attached to the circuit route of the flex or display glass, this bit (D5) is not inverted (= increased by 1).

The following figure is for reference purposes; how this chip attachment can be implemented e.g. there are connected together 2 bumps via route of ITO or the flex foil on 4 corners of the driver (chip).

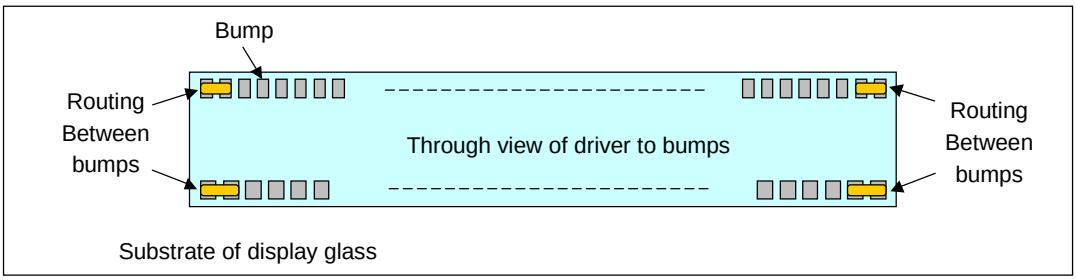

The flow chart for this internal function is following:

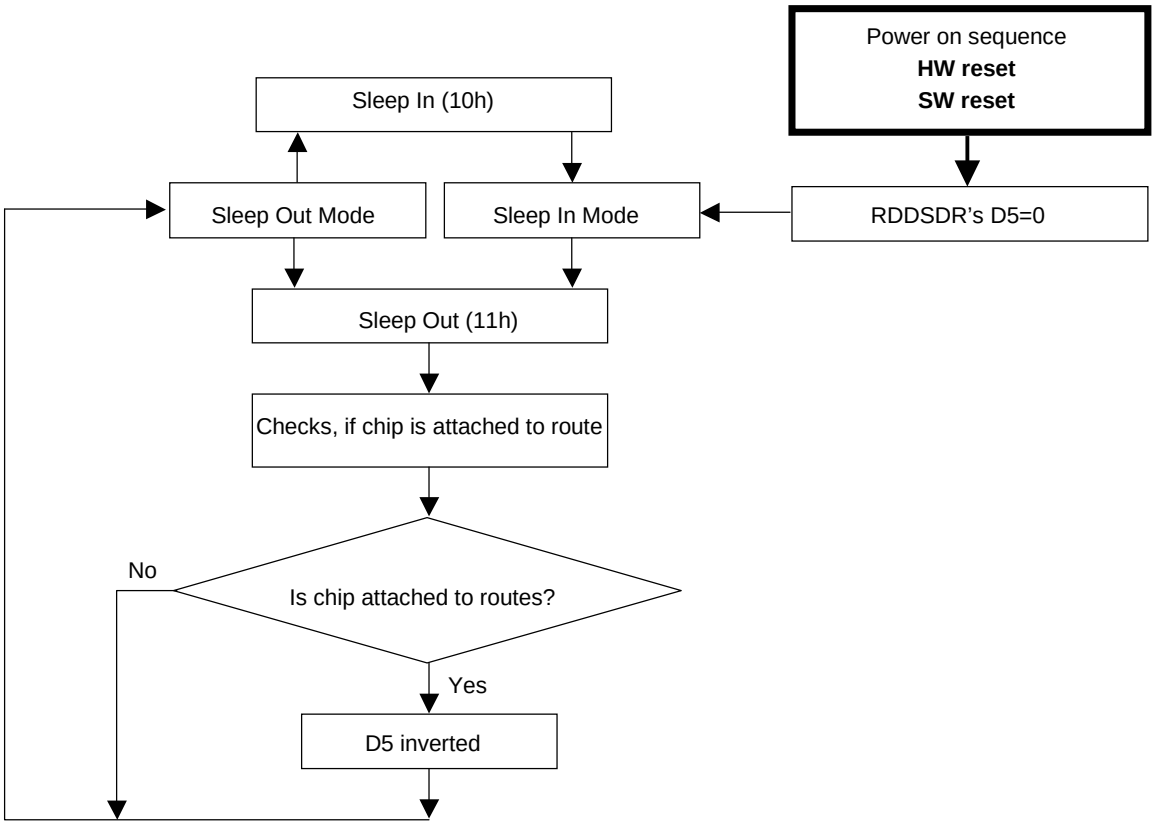

9.20.4 Display Glass Break Detection

Sleep Out-command (See section 10.1.12 “Sleep Out (11h)”) is a trigger for an internal function of the display module, which indicates, if the display glass of the display module is broken or not.

There is inverted (= increased by 1) a bit, which is defined in command 10.1.10 “Read Display Self-Diagnostic Result (0Fh)” (= RDDSDR) (The used bit of this command is D4), if the display glass is not broken. If this display glass is broken, this bit (D4) is not inverted (= increased by 1).

The following figure is a reference, how this glass break detection can be implemented e.g. there is connected together 2 bumps via route of ITO. This route of ITO is the nearest route of the edge of the display glass.

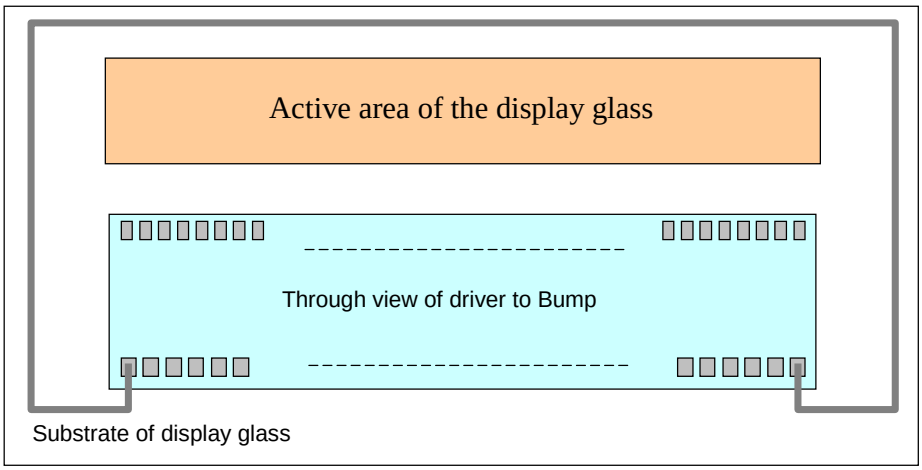

The flow chart for this internal function is following:

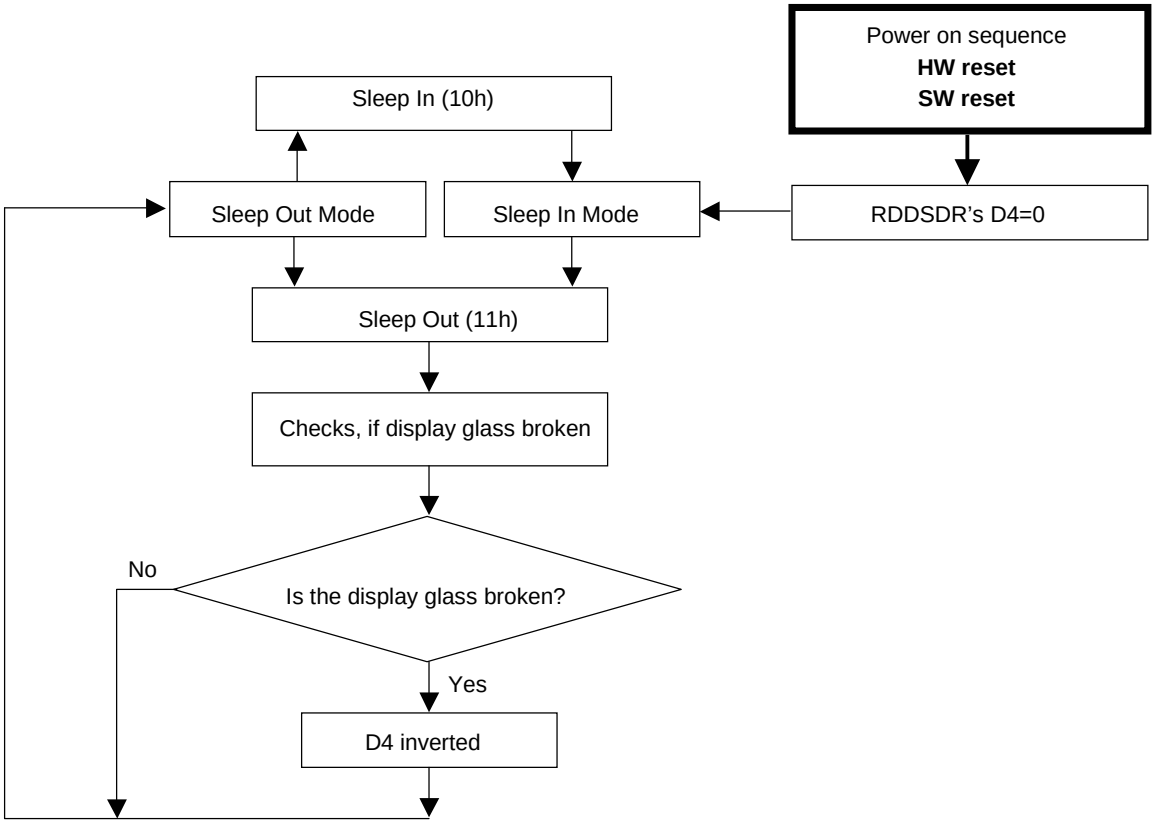

9.21 External Light Source
The operation of the module can meet customer's Environmental reliability requirements.

9.22 Oscillator
The chip has on-chip oscillator that does not require external components. This oscillator output signal is used for system clock generation for internal display operation.

9.23 System Clock Generator
The timing generator produces the various signals to driver the internal circuitty. Internal chip operation is not affected by operations on the data bus.

9.24 Instruction Decoder and Register
The instruction decoder indentifies command words arriving at the interface and routes the following data bytes to their destination. The command set can be found in "Command" section.

9.25 Source Driver
The source driver block includes 132x3 source outputs (S1 to S396), which should be connected directly to the TFT-LCD. The source output signals are generated in the data processing block after the data is read out of the RAM and latched, which represent the simulatance selected rows.

9.26 Gate Driver
The gate driver block includes 162 channel gate output (G1 to G162) which should be connected directly to the TFT-LCD.

9.27 VSYNC Interface
The ST7732 incorporates a VSYNC I/F, which enables to display a moving picture which only system interface and frame-synchronizing signal. The interface enables to display moving pictures with minimum modification to a conventional system.

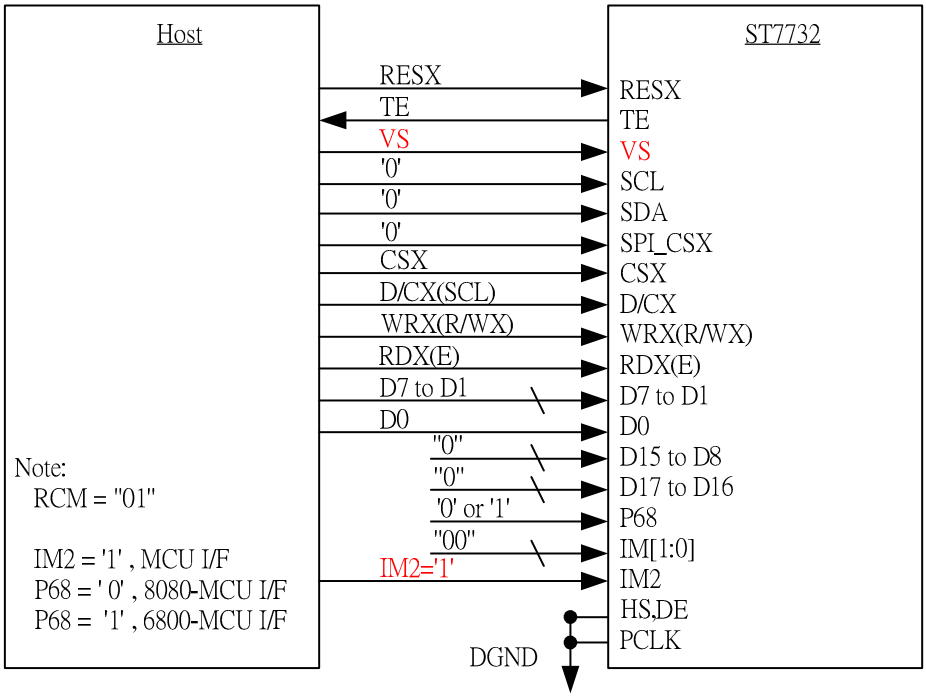

The VSYNC-I/F is turned ON by ***VSYNC-I/F ON(ADH)*** command and turned OFF by ***VSYNC-I/F(ACH)*** command. In VSYNC-I/F mode, internal display operations are synchronized with VS. The VSYNC-I/F enables to display a moving picture through a system interface in higher speed than the internal display operations by some degree.

The VSYNC-I/F executes display operations only with internal clocks generated by internal oscillators and VS input. All display data are stored in RAM so that only the data relevant to updating a screen are transferred to minimize data transmission while displaying a moving picture.

-Leading Mode

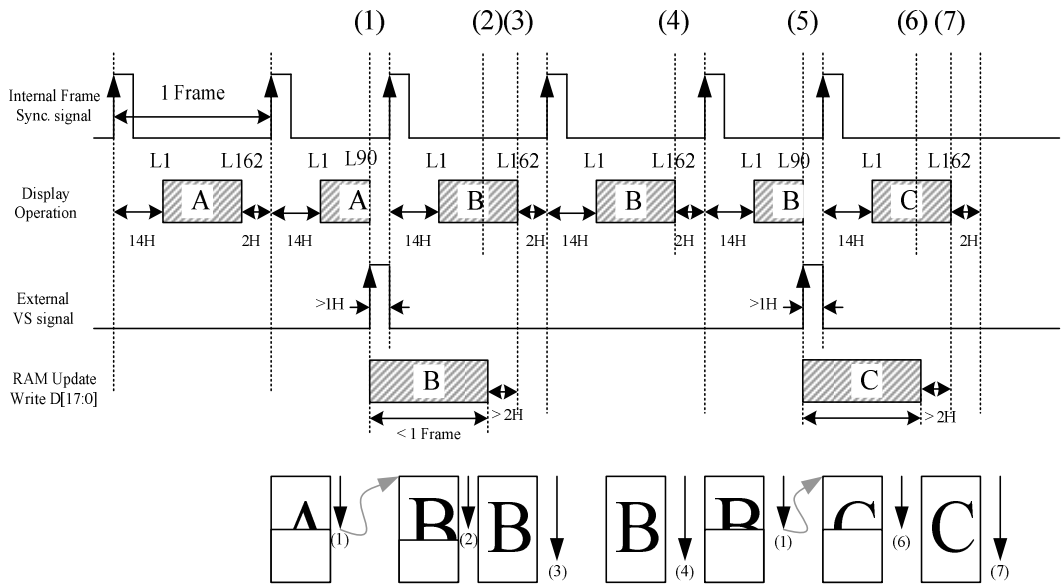

-Lagging Mode

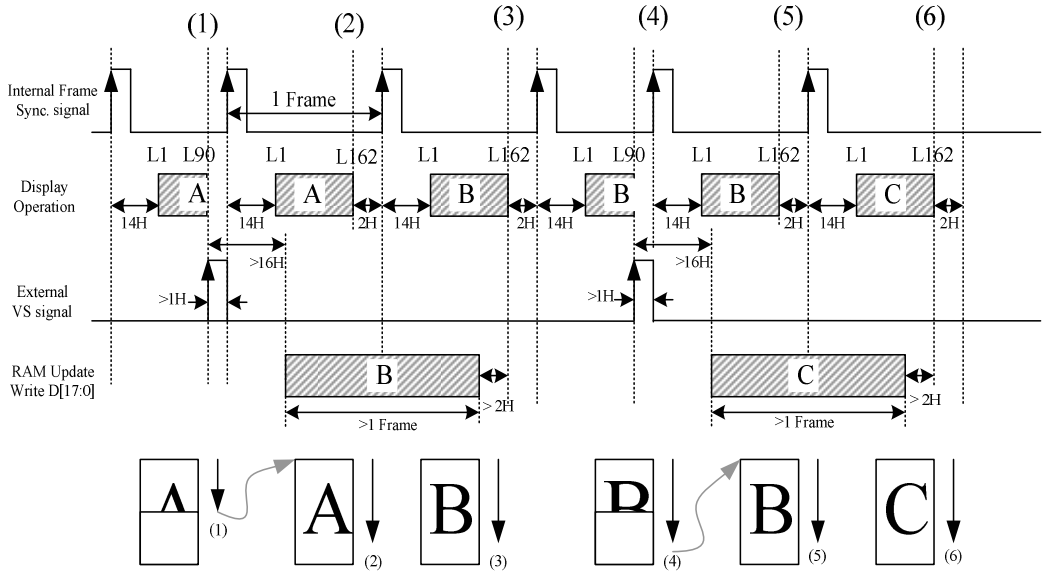

1. In RCM[1:0]="01" mode, writing data to RAM on rising edge of VS signal.
2. If high pulse of VS signal should large than 1-lines.
3. The BP and FP should follow conditions: BP≧2-lines, FP≧2-lines and BP+FP =16-lines
4. The signals (CSX, WRX, D/CX and VS) of VSYNC I/F should follow MCU Parallel Interface AC timing.

The VSYNC-I/F has limits on the minimum RAM write speed through the system interface and the frequency of the internal clocks. It requires a RAM write speed more than the calculated result from the following formula.

-Internal clock frequency (fosc)[Hz] =
Frame Frequency x (DisplayLines+FrontPorch(VSFP)+BackPorch(VSBP)) x 16(clocks) x fluctuation

Example of RAMs writes speed and the frequency of the internal clocks in VSYNC-I/F mode is as follows.

Example: Display size= 132 RGB x 162 lines, Raster rows= 162 lines, Back/Front porch: 14/2 lines(VSBP = 1110, VSFP = 0010 of AFH), Frame frequency = 60 Hz

Internal clock frequency (fosc)[Hz] = 60Hz x (162+2+14) x 16 clocks x 1.1/0.9 = 209 kHz

When calculating an internal clock frequency, possible causes of fluctuations must also be taken into consideration. In this example, the allowance for the fluctuation is x10% from the center value and the

frequency must be within a VS cycle.

Also in this example, variations attributed to LSI fabrication and room temperature are taken into consideration as causes of fluctuations. Other possible causes of fluctuations, such as variations in external resistors or voltage changes are not considered in this example. It is necessary to make a setting with enough margins to accommodate

-When Frame frequency is 60Hz

Minimum speed for RAM writing[Hz]> 132x162/{((14+162+2)lines x 16 clock)/300kHz}=1.6MHz

Note 1, When RAM write does not start right affer the falling edge of VS, the time from the falling edge of VS until RAM write starts must also be taken into account.
Note 2, The above calculation is premised on the case of writing data to RAM on the falling edge of VS.
Note 3, There must atleast be a margin of 2 processing lines when all one-frame data are written to RAM before the ST7732 starts processing display llines

By writing data to RAM on rising edge of VS signal at speed of 1.6MHz(Frame rate =60Hz) or more, it is possible to overwrite an entire screen without flicker by completing dta write operatipon of a line before it starts display operation of that line

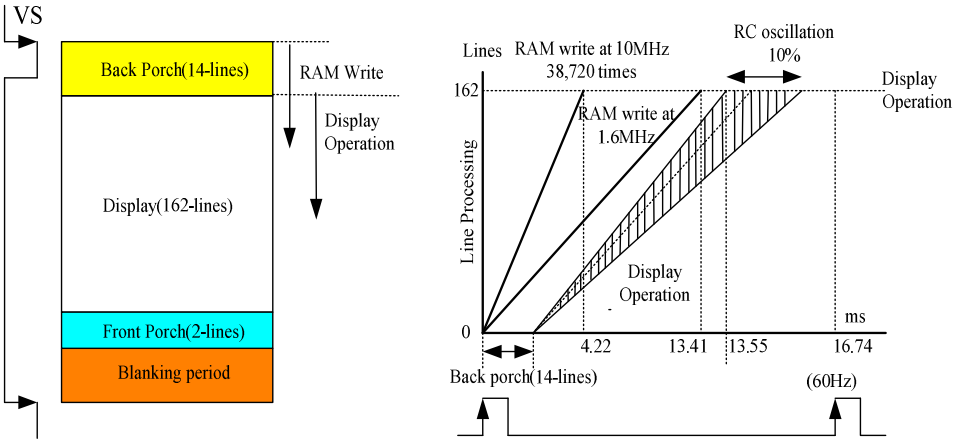

Notes:

1. The aforementioned example of calculation is just a result of calculation. In actual settings, possible causes of fluctuations should be taken into comsideration. It is necessary to give enough margins when setting a RAM writing speed.
2. The aforementioned example of calculation is the value in case of overwriting full screen. If a moving picture display area is limited, it will result in more margins between RAMs write and display operations.
3. A front porch period continues after completion of 1 frame and until the next input of VS. The partial display and vertical scroll functions are not available with then VSYNC-I/F.

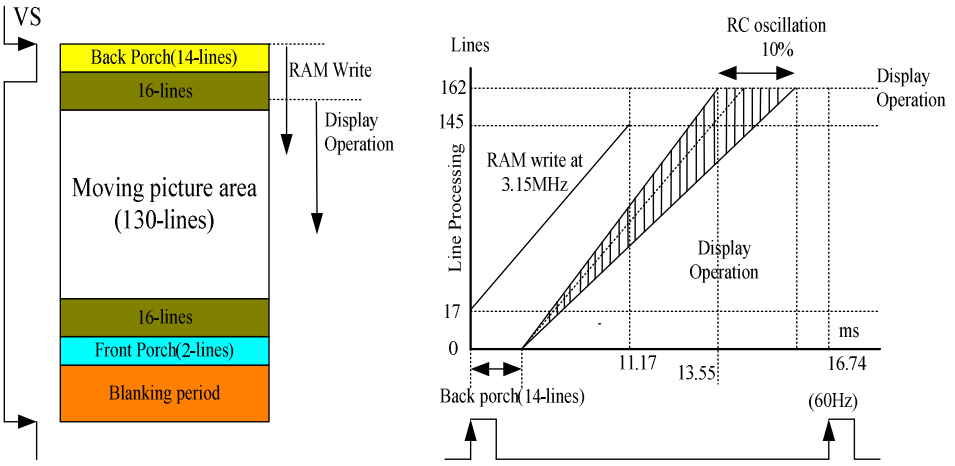

10. Command

10.1 System function Command List and Description

Table 10.1.1 System Function command List (1)

Instruction	Refer	D/CX	WRX	RDX	D17-8	D7	D6	D5	D4	D3	D2	D1	D0	(Hex)	Function
NOP	10.1.1	0	↑	1	-	0	0	0	0	0	0	0	0	(00h)	No Operation
SWRESET	10.1.2	0	↑	1	-	0	0	0	0	0	0	0	1	(01h)	Software reset
RDDID	10.1.3	0	↑	1	-	0	0	0	0	0	1	0	0	(04h)	Read Display ID
		1	1	↑	-	-	-	-	-	-	-	-	-		Dummy read
		1	1	↑	-	ID17	ID16	ID15	ID14	ID13	ID12	ID11	ID10		ID1 read
		1	1	↑	-	1	ID26	ID25	ID24	ID23	ID22	ID21	ID20		ID2 read
		1	1	↑	-	ID37	ID36	ID35	ID34	ID33	ID32	ID31	ID30		ID3 read
RDDST	10.1.4	0	↑	1	-	0	0	0	0	1	0	0	1	(09h)	Read Display Status
		1	1	↑	-	-	-	-	-	-	-	-	-		Dummy read
		1	1	↑	-	BSTON	MY	MX	MV	ML	RGB	-	ST24		-
		1	1	↑	-	ST23	IFPF2	IFPF1	IFPF0	IDMON	PTLON	SLOUT	NORON		-
		1	1	↑	-	VSSON	ST14	INVON	ST21	ST11	DISON	TEON	GCS2		-
		1	1	↑	-	GCS1	GCS0	TELON	HSON	VSON	PCKON	DEON	ST0		-
RDDPM	10.1.5	0	↑	1	-	0	0	0	0	1	0	1	0	(0Ah)	Read Display Power Mode
		1	1	↑	-	-	-	-	-	-	-	-	-		Dummy read
		1	1	↑	-	BSTON	IDMON	PTLON	SLPOUT	NORON	DISON	-	-		-
RDD MADCTL	10.1.6	0	↑	1	-	0	0	0	0	1	0	1	1	(0Bh)	Read Display MADCTL
		1	1	↑	-	-	-	-	-	-	-	-	-		Dummy read
		1	1	↑	-	MY	MX	MV	ML	RGB	-	-	-		-
RDD COLMOD	10.1.7	0	↑	1	-	0	0	0	0	1	1	0	0	(0Ch)	Read Display Pixel Format
		1	1	↑	-	-	-	-	-	-	-	-	-		Dummy read
		1	1	↑	-	VIPF3	VIPF2	VIPF1	VIP0	-	IFPF2	IFPF1	IFPF0		-
RDDIM	10.1.8	0	↑	1	-	0	0	0	0	1	1	0	1	(0Dh)	Read Display Image Mode
		1	1	↑	-	-	-	-	-	-	-	-	-		Dummy read
		1	1	↑	-	VSSON	D6	INVON	-	-	GCS2	GCS1	GCS0		-
RDDSM	10.1.9	0	↑	1	-	0	0	0	0	1	1	1	0	(0Eh)	Read Display Signal Mode
		1	1	↑	-	-	-	-	-	-	-	-	-		Dummy read
		1	1	↑	-	TEON	TELON	HSON	VSON	PCKON	DEON	-	-		-
RDDSDR	10.1.10	0	↑	1	-	0	0	0	0	1	1	1	1	(0Fh)	Read Display Self-diagnostic result
		1	1	↑	-	-	-	-	-	-	-	-	-		Dummy read
		1	1	↑	-	RELD	FUND	ATTD	BRD	-	-	-	-		-

"-": Don't care

Table 10.1.2 System Function command List (2)

Instruction	Refer	D/CX	WRX	RDX	D17-8	D7	D6	D5	D4	D3	D2	D1	D0	(Hex)	Function
SLPIN	10.1.11	0	↑	1	-	0	0	0	1	0	0	0	0	(10h)	Sleep in & booster off
SLPOUT	10.1.12	0	↑	1	-	0	0	0	1	0	0	0	1	(11h)	Sleep out & booster on
PTLON	10.1.13	0	↑	1	-	0	0	0	1	0	0	1	0	(12h)	Partial mode on
NORON	10.1.14	0	↑	1	-	0	0	0	1	0	0	1	1	(13h)	Partial off (Normal)
INVOFF	10.1.15	0	↑	1	-	0	0	1	0	0	0	0	0	(20h)	Display inversion off (normal)
INVON	10.1.16	0	↑	1	-	0	0	1	0	0	0	0	1	(21h)	Display inversion on
GAMSET	10.1.17	0	↑	1	-	0	0	1	0	0	1	1	0	(26h)	Gamma curve select
		1	↑	1	-	-	-	-	-	GC3	GC2	GC1	GC0		-
DISPOFF	10.1.18	0	↑	1	-	0	0	1	0	1	0	0	0	(28h)	Display off
DISPON	10.1.19	0	↑	1	-	0	0	1	0	1	0	0	1	(29h)	Display on
CASET	10.1.20	0	↑	1	-	0	0	1	0	1	0	1	0	(2Ah)	Column address set
		1	↑	1	-	-	-	-	-	-	-	-	-		X address start: 0≦S≦X
		1	↑	1	-	XS7	XS6	XS5	XS4	XS3	XS2	XS1	XS0		
		1	↑	1	-	-	-	-	-	-	-	-	-		X address end: XS≦XE≦X
		1	↑	1	-	XE7	XE6	XE5	XE4	XE3	XE2	XE1	XE0		
RASET	10.1.21	0	↑	1	-	0	0	1	0	1	0	1	1	(2Bh)	Row address set
		1	↑	1	-	-	-	-	-	-	-	-	-		Y address start: 0≦YS≦Y
		1	↑	1	-	YS7	YS6	YS5	YS4	YS3	YS2	YS1	YS0		
		1	↑	1	-	-	-	-	-	-	-	-	-		Y address end:S≦YE≦Y
		1	↑	1	-	YE7	YE6	YE5	YE4	YE3	YE2	YE1	YE0		
RAMWR	10.1.22	0	↑	1	-	0	0	1	0	1	1	0	0	(2Ch)	Memory write
		1	↑	1	-	D7	D6	D5	D4	D3	D2	D1	D0		Write data
RAMRD	10.1.23	0	↑	1	-	0	0	1	0	1	1	1	0	(2Eh)	Memory read
		1	1	↑	-	-	-	-	-	-	-	-	-		Dummy read
		1	1	↑	-	D7	D6	D5	D4	D3	D2	D1	D0		Read data

"-": Don't care

Table 10.1.3 System Function command List (3)

Instruction	Refer	D/CX	WRX	RDX	D17-8	D7	D6	D5	D4	D3	D2	D1	D0	(Hex)	Function
PTLAR	10.1.25	0	↑	1	-	0	0	1	1	0	0	0	0	(30h)	Partial start/end address set
		1	↑	1	-	-	-	-	-	-	-	-	-		Partial start address (0,1,2, ..P)
		1	↑	1	-	PSL7	PSL6	PSL5	PSL4	PSL3	PSL2	PSL1	PSL0		
		1	↑	1	-	-	-	-	-	-	-	-	-		Partial end address (0,1,2, .., P)
		1	↑	1	-	PEL7	PEL6	PEL5	PEL4	PEL3	PEL2	PEL1	PEL0		
SCRLAR	10.1.26	0	↑	1	-	0	0	1	1	0	0	1	1	(33h)	Scroll area set
		1	↑	1	-	-	-	-	-	-	-	-	-		Top fixed area (0,1,2, .., S)
		1	↑	1	-	TFA7	TFA6	TFA5	TFA4	TFA3	TFA2	TFA1	TFA0		
		1	↑	1	-	-	-	-	-	-	-	-	-		Vertical scroll area (0,1,2, .., S)
		1	↑	1	-	VSA7	VSA6	VSA5	VSA4	VSA3	VSA2	VSA1	VSA0		
		1	↑	1	-	-	-	-	-	-	-	-	-		Bottom fixed area (0,1,2, .., S)
		1	↑	1	-	BFA7	BFA6	BFA5	BFA4	BFA3	BFA2	BFA1	BFA0		
TEOFF	10.1.27	0	↑	1	-	0	0	1	1	0	1	0	0	(34h)	Tearing effect line off
TEON	10.1.28	0	↑	1	-	0	0	1	1	0	1	0	1	(35h)	Tearing effect mode set & on
		1	↑	1	-	-	-	-	-	-	-	-	TELOM		Mode1: TELOM="0" Mode2: TELOM="1"
MADCTL	10.1.29	0	↑	1	-	0	0	1	1	0	1	1	0	(36h)	Memory data access control
		1	↑	1	-	MY	MX	MV	ML	RGB	-	-	-		-
VSCSAD	10.1.30	0	↑	1	-	0	0	1	1	0	1	1	1	(37h)	Scroll start address of RAM
		1	↑	1	-	-	-	-	-	-	-	-	-		SSA = 0, 1, 2, …, 131
		1	↑	1	-	SSA7	SSA6	SSA5	SSA4	SSA3	SSA2	SSA1	SSA0		
IDMOFF	10.1.31	0	↑	1	-	0	0	1	1	1	0	0	0	(38h)	Idle mode off
IDMON	10.1.32	0	↑	1	-	0	0	1	1	1	0	0	1	(39h)	Idle mode on
COLMOD	10.1.33	0	↑	1	-	0	0	1	1	1	0	1	0	(3Ah)	Interface pixel format
		1	↑	1	-	VIPF3	VIPF2	VIPF1	VIPF0	-	IFPF2	IFPF1	IFPF0		Interface format
RDID1	10.1.34	0	↑	1	-	1	1	0	1	1	0	1	0	(DAh)	Read ID1
		1	1	↑	-	-	-	-	-	-	-	-	-		Dummy read
		1	1	↑	-	ID17	ID16	ID15	ID14	ID13	ID12	ID11	ID10		Read parameter
RDID2	10.1.35	0	↑	1	-	1	1	0	1	1	0	1	1	(DBh)	Read ID2
		1	1	↑	-	-	-	-	-	-	-	-	-		Dummy read
		1	1	↑	-	1	ID26	ID25	ID24	ID23	ID22	ID21	ID20		Read parameter
RDID3	10.1.36	0	↑	1	-	1	1	0	1	1	1	0	0	(DCh)	Read ID3
		1	1	↑	-	-	-	-	-	-	-	-	-		Dummy read
		1	1	↑	-	ID37	ID36	ID35	ID34	ID33	ID32	ID31	ID30		Read parameter

"-": Don't care

Note 1: After the H/W reset by RESX pin or S/W reset by SWRESET command, each internal register becomes default state (Refer "RESET TABLE" section)

Note 2: Undefined commands are treated as NOP (00 h) command.

Note 3: B0 to D9 and DA to F are for factory use of driver supplier.

Note 4: Commands 10h, 12h, 13h, 20h, 21h, 26h, 28h, 29h, 30h, 33h, 36h (ML parameter only), 37h, 38h and 39h are updated during V-sync when Module is in Sleep Out Mode to avoid abnormal visual effects. During Sleep In mode, these commands are updated immediately. Read status (09h), Read Display Power Mode (0Ah), Read Display MADCTL (0Bh), Read Display Pixel Format (0Ch), Read Display Image Mode (0Dh), Read Display Signal Mode (0Eh) and Read Display Self Diagnostic Result (0Fh) of these commands are updated immediately both in Sleep In mode and Sleep Out mode.

10.2 Panel Function Command List and Description

Table 10.2.1 Panel Function Command List (1)

Instruction	Refer	D/CX	WRX	RDX	D23-8	D7	D6	D5	D4	D3	D2	D1	D0	(Hex)	Function
RGBCTR	10.2.1	0	↑	1	-	1	0	1	1	0	0	0	0	(B0h)	Set RGB signal control
		1	↑	1	-	0	0	DISSW	ICM	DP	EP	HSP	VSP		ICM: RGB data ascess select DW RGB interface bus width set DP, HSP, VSP: PCLK, HS, VS polarity set
FRMCTR1	10.2.2	0	↑	1	-	1	0	1	1	0	0	0	1	(B1h)	In normal mode (Full colors)
		1	↑	1	-					RTNA3	RTNA2	RTNA1	RTNA0		RTNA set 1-line period FPA: front porch BPA: back porch
		1	↑	1	-					FPA3	FPA2	FPA1	FPA0		
		1	↑	1	-					BPA3	BPA2	BPA1	BPA0		
FRMCTR2	10.2.3	0	↑	1	-	1	0	1	1	0	0	1	0	(B2h)	In Idle mode (8-colors)
		1	↑	1	-					RTNB3	RTNB2	RTNB1	RTNB0		RTNB: set 1-line period FPB: front porch BPB: back porch
		1	↑	1	-					FPB3	FPB2	FPB1	FPB0		
		1	↑	1	-					BPB3	BPB2	BPB1	BPB0		
FRMCTR3	10.2.4	0	↑	1	-	1	0	1	1	0	0	1	1	(B3h)	In partial mode + Full colors
		1	↑	1	-					RTNC3	RTNC2	RTNC1	RTNC0		RTNC,RTND: set 1-line period FPC,FPD: front porch BPC,BPD: back porch
		1	↑	1	-					FPC3	FPC2	FPC1	FPC0		
		1	↑	1	-					BPC3	BPC2	BPC1	BPC0		
		1	↑	1	-					RTND3	RTND2	RTND1	RTND0		
		1	↑	1	-					FPD3	FPD2	FPD1	FPD0		
		1	↑	1	-					BPD3	BPD2	BPD1	BPD0		
INVCTR	10.2.5	0	↑	1	-	1	0	1	1	0	1	0	0	(B4h)	Display inversion control
		1	↑	1	-	0	0	0	0	0	NLA	NLB	NLC		NLA,NLB,NLC set inversion
RGB BPCTR	10.2.6	0	↑	1	-	1	0	1	1	0	1	0	1	(B5h)	RGB I/F Blanking porch setting
		1	↑	1	-	-	-	-	-	-	-	-	-		
		1	↑	1	-	VBP7	VBP6	VBP5	VBP4	VBP3	VBP2	VBP1	VBP0		
		1	↑	1	-	-	-	-	-	-	-	-	HBP8		
		1	↑	1	-	HBP7	HBP6	HBP5	HBP4	HBP3	HBP2	HBP1	HBP0		
DISSET5	10.2.7	0	↑	1	-	1	0	1	1	0	1	1	0	(B6h)	Display function setting
		1	↑	1	-	0	0	NO1	NO0	SDT1	SDT0	EQ1	EQ0		NO: the amount of non-overlap SDT: set amount of source delay EQ: set EQ period PT: No display area source/VCOM/Gate output control
		1	↑	1		0	0	0	0	PTG1	PTG0	PT1	PT0		

Table 10.2.2 Panel Function Command List (2)

Instruction	Refer	D/CX	WRX	RDX	D17-8	D7	D6	D5	D4	D3	D2	D1	D0	(Hex)	Function
PWCTR1	10.2.8	0	↑	1	-	1	1	0	0	0	0	0	0	(C0h)	Power control setting
		1	↑	1	-	0	0	0	VRH4	VRH3	VRH2	VRH1	VRH0		VRH: Set the GVDD voltage
		1	↑	1	-	0	0	0	0	0	VC2	VC1	VC0		VC: Set the VCI1 voltage
PWCTR2	10.2.9	0	↑	1	-	1	1	0	0	0	0	0	1	(C1h)	Power control setting
		1	↑	1	-	0	0	0	0	0	BT2	BT1	BT0		BT: set AVDD/VCL/VGH/ VGL voltage
PWCTR3	10.2.10	0	↑	1	-	1	1	0	0	0	0	1	0	(C2h)	In normal mode (Full colors)
		1	↑	1	-	0	0	0	0	0	APA2	APA1	APA0		APA: adjust the operational amplifier
					-	0	0	0	0	0	0	0	0		
		1	↑	1	-	0	0	0	0	0	DCA2	DCA1	DCA0		DCA: adjust the booster circuit for Idle mode
					-	0	0	0	0	0	0	0	0		
PWCTR4	10.2.11	0	↑	1	-	1	1	0	0	0	0	1	1	(C3h)	In Idle mode (8-colors)
		1	↑	1	-	0	0	0	0	0	APB2	APB1	APB0		APB: adjust the operational amplifier
					-	0	0	0	0	0	0	0	0		
		1	↑	1	-	0	0	0	0	0	DCB2	DCB1	DCB0		DCB: adjust the booster circuit for Idle mode
					-	0	0	0	0	0	0	0	0		
PWCTR5	10.2.12	0	↑	1	-	1	1	0	0	0	1	0	0	(C4h)	In partial mode + Full colors
		1	↑	1	-	0	0	0	0	0	APC2	APC1	APC0		APC: adjust the operational amplifier
		1	↑	1	-	0	0	0	0	0	DCC2	DCC1	DCC0		DCC: adjust the booster circuit for Idle mode
VMCTR1	10.2.13	0	↑	1	-	1	1	0	0	0	1	0	1	(C5h)	VCOM control 1
		1	↑	1	-	-	VMH6	VMH 5	VMH4	VMH3	VMH2	VMH1	VMH0		VMH: VCOMH voltage control
		1	↑	1	-	-	VML6	VML5	VM 4	VML3	VML2	VML1	VML0		VML: VCOML voltage control
VMOFCTR	10.2.14	0	↑	1	-	1	1	0	0	0	1	1	1	(C7h)	VCOM offset control
		1	↑	1	-	-	VMF6	-	-	VMF3	VMF2	VMF1	VMF0		

"-": Don't care

Note 1: C0h to C7h are fixed for about power controller.

Table 10.2.3 Panel Function Command List (3)

Instruction	Refer	D/CX	WRX	RDX	D17-8	D7	D6	D5	D4	D3	D2	D1	D0	(Hex)	Function
WRID2	10.2.15	0	↑	1	-	1	1	0	1	0	0	0	1	(D1h)	LCM version code
		1	↑	1	-	0	ID26	ID25	ID24	ID23	ID22	ID21	ID20		Write ID2 value to NV memory Set the LCM version code at ID2
WRID3	10.2.16	0	↑	1	-	1	1	0	1	0	0	1	0	(D2h)	Customer Project code
		1	↑	1	-	ID37	ID36	ID35	ID34	ID33	ID32	ID31	ID30		Write ID3 value to NV memory Set the project code at ID3
RDID4	10.2.17	0	↑	1	-	1	1	0	1	0	0	1	1	(D3h)	IC Vender Coder
		1	1	↑	-	-	-	-	-	-	-	-	-		Dummy read
		1	1	↑	-	ID417	ID416	ID415	ID414	ID413	ID412	ID411	ID410		ID41:IC Vender Code ID42: IC Part Number Code ID43 & ID44: Chip version coder
		1	1	↑	-	ID427	ID426	ID425	ID424	ID423	ID422	ID421	ID420		
		1	1	↑	-	ID437	ID436	ID435	ID434	ID433	ID432	ID431	ID430		
		1	1	↑	-	ID447	ID446	ID445	ID444	ID443	ID442	ID441	ID440		
NVCTR1	10.2.18	0	↑	1	-	1	1	0	1	1	0	0	1	(D9h)	NVM control status
		1	1	↑	-	-	-	-	EXTC	-	-	-	RDY		
NVCTR2	10.2.19	0	↑	1	-	1	1	0	1	1	1	1	0	(DEh)	NVM read command
		1	↑	1	-	1	0	1	0	1	0	1	0	AA	
		1	↑	1	-	0	0	0	0	1	1	1	1	0F	
		1	↑	1	-	1	0	1	0	0	1	0	1	A5	
NVCTR3	10.2.20	0	↑	1	-	1	1	0	1	1	1	1	1	(DFh)	NVM write command
		1	↑	1	-	0	1	0	1	0	1	0	1	55	
		1	↑	1	-	1	1	1	1	0	0	0	0	F0	
		1	↑	1	-	0	1	0	1	1	0	1	0	5A	

"-": Don't care

Note 1: The D1h to D3h registers are fixed for about ID code setting.

Note 2: The D9h, DEh and DFh registers are used for NV Memory function controller. (Ex: write, clear, etc.)

Table 10.2.4 Panel Function Command List (4)

Instruction	Refer	D/CX	WRX	RDX	D17-8	D7	D6	D5	D4	D3	D2	D1	D0	(Hex)	Function
GAMCTRP1	10.2.21	0	↑	1	-	1	1	1	0	0	0	0	0	(E0h)	Set Gamma correction
		1	↑	1	-	-	-	-	-	RFP3	RFP2	RFP1	RFP0		Gamma adjustment (+ polarity)
		1	↑	1	-	-	-	-	PKP04	PKP03	PKP02	PKP01	PKP00		
		1	↑	1	-	-	-	-	PKP14	PKP13	PKP12	PKP11	PKP10		
		1	↑	1	-	-	-	-	PKP24	PKP23	PKP22	PKP21	PKP20		
		1	↑	1	-	-	-	-	PKP34	PKP33	PKP32	PKP31	PKP30		
		1	↑	1	-	-	-	-	PKP44	PKP43	PKP42	PKP41	PKP40		
		1	↑	1	-	-	-	-	-	PKP53	PKP52	PKP51	PKP50		
		1	↑	1	-	-	-	-	-	PKP63	PKP62	PKP61	PKP60		
		1	↑	1	-	-	-	-	-	PKP73	PKP72	PKP71	PKP70		
		1	↑	1	-	-	-	-	-	PKP83	PKP82	PKP81	PKP80		
		1	↑	1	-	-	-	-	RFP14	RFP13	RFP12	RFP11	RFP10		
		1	↑	1		-	-	-	OSP14	OSP13	OSP12	OSP11	OSP10		
		1	↑	1	-	-	-	-	-	OSP3	OSP2	OSP1	OSP0		
GAMCTRN1	10.2.22	0	↑	1	-	1	1	1	0	0	0	0	0	(E1h)	Set Gamma correction
		1	↑	1	-	-	-	-	-	RFN3	RFN2	RFN1	RFN0		Gamma adjustment (- polarity)
		1	↑	1	-	-	-	-	PKN04	PKN03	PKN02	PKN01	PKN00		
		1	↑	1	-	-	-	-	PKN14	PKN13	PKN12	PKN11	PKN10		
		1	↑	1	-	-	-	-	PKN24	PKN23	PKN22	PKN21	PKN20		
		1	↑	1	-	-	-	-	PKN34	PKN33	PKN32	PKN31	PKN30		
		1	↑	1	-	-	-	-	PKN44	PKN43	PKN42	PKN41	PKN40		
		1	↑	1	-	-	-	-	-	PKN53	PKN52	PKN51	PKN50		
		1	↑	1	-	-	-	-	-	PKN63	PKN62	PKN61	PKN60		
		1	↑	1	-	-	-	-	-	PKN73	PKN72	PKN71	PKN70		
		1	↑	1	-	-	-	-	-	PKN83	PKN82	PKN81	PKN80		
		1	↑	1	-	-	-	-	RFN14	RFN13	RFN12	RFN11	RFN10		
		1	↑	1	-	-	-	-	OSN14	OSN13	OSN12	OSN11	OSN10		
		1	↑	1	-	-	-	-	-	OSN3	OSN2	OSN1	OSN0		
AUTO CTRL	10.2.23	0	↑	1	-	1	1	1	1	0	0	0	1	(F1h)	NVM write function ON/OFF
		1	↑	1	-	NVM PROG	0	0	0	1	0	0	0		
OSCADJ	10.2.24	0	↑	1	-	1	1	1	1	0	0	1	0	(F2h)	Oscillator frequency setting
		1	↑	1	-	0	0	0	0	0	OSC SEL2	OSC SEL1	OSC SEL0		
DISPCTRL	10.2.25	0	↑	1	-	1	1	1	1	0	1	0	1	(F5h)	Display function control
		1	↑	1	-	PDM1	PDM0	FLM	C8ON	EQPW1	EQPW0	EQVDD	ENGS		
DEFADJ	10.2.26	0	↑	1	-	1	1	1	1	0	1	1	0	(F6h)	Default mode setting
		1	↑	1	-	0	1	0	0	0	1	0	TESEL OE		

"-": Don't care

Note 1: E0-E1 registers are fixed for about Gamma adjusting.

10.1.1 NOP (00h)

00H	NOP (No Operation)												
Inst / Para	D/CX	WRX	RDX	D17-8	D7	D6	D5	D4	D3	D2	D1	D0	(Code)
NOP	0	↑	1	-	0	0	0	0	0	0	0	0	(00h)
Parameter	No Parameter												-

NOTE: "-" Don't care

Description	-This command is empty command.

10.1.2 SWRESET (01h): Software Reset

01H	SWRESET (Software Reset)												
Inst / Para	D/CX	WRX	RDX	D17-8	D7	D6	D5	D4	D3	D2	D1	D0	(Code)
SWRESET	0	↑	1	-	0	0	0	0	0	0	0	1	(01h)
Parameter	No Parameter												-

NOTE: "-" Don't care

Description	-If Software Reset is applied during Sleep In mode, it will be necessary to wait 120msec before sending next command. -The display module loads all default values to the registers during 120msec. -If Software Reset is applied during Sleep Out or Display On Mode, it will be necessary to wait 120msec before sending next command.

10.1.3 RDDID (04h): Read Display ID

04H	RDDID (Read Display ID)												
Inst / Para	D/CX	WRX	RDX	D17-8	D7	D6	D5	D4	D3	D2	D1	D0	(Code)
RDDID	0	↑	1	-	0	0	0	0	0	1	0	0	(04h)
1st Parameter	1	1	↑	-	-	-	-	-	-	-	-	-	-
2nd Parameter	1	1	↑	-	ID17	ID16	ID15	ID14	ID13	ID12	ID11	ID10	
3rt Parameter	1	1	↑	-	1	ID26	ID25	ID24	ID23	ID22	ID21	ID20	
4th Parameter	1	1	↑	-	ID37	ID36	ID35	ID34	ID33	ID32	ID31	ID30	

NOTE: "-" Don't care

Description	-This read byte returns 24-bit display identification information. -The 1st parameter is dummy data -The 2nd parameter (ID17 to ID10): LCD module's manufacturer ID. -The 3rd parameter (ID26 to ID20): LCD module/driver version ID -The 4th parameter (ID37 to UD30): LCD module/driver ID. *NOTE: Commands RDID1/2/3(DAh, DBh, DCh) read data correspond to the parameters 2,3,4 of the command 04h, respectively.*
Default	

Status	Default Value		
	ID1	ID2	ID3
Power On Sequence	-	8xh	00h
S/W Reset	-	8xh	00h
H/W Reset	-	8xh	00h

10.1.4 RDDST (09h): Read Display Status

09H	RDDST (Read Display Status)												
Inst / Para	D/CX	WRX	RDX	D17-8	D7	D6	D5	D4	D3	D2	D1	D0	(Code)
RDDST	0	↑	1	-	0	0	0	0	1	0	0	1	(09h)
1st Parameter	1	1	↑	-	-	-	-	-	-	-	-	-	-
2nd Parameter	1	1	↑	-	BSTON	MY	MX	MV	ML	RGB	-	ST24	
3rd Parameter	1	1	↑	-	ST23	IFPF2	IFPF1	IFPF0	IDMON	PTLON	SLOUT	NORON	
4th Parameter	1	1	↑	-	VSSON	ST14	INVON	ST12	ST11	DISON	TEON	GCS2	
5th Parameter	1	1	↑	-	GCS1	GCS0	TELOM	HSON	VSON	PCKON	DEON	ST0	

NOTE: "-" Don't care

Description

This command indicates the current status of the display as described in the table below:

Bit	Description	Value
BSTON	Booster Voltage Status	'1' =Booster on, '0' =Booster off
MY	Row Address Order (MY)	'1' =Decrement, (Bottom to Top, when MADCTL (36h) D7='1') '0' =Increment, (Top to Bottom, when MADCTL (36h) D7='0')
MX	Column Address Order (MX)	'1' =Decrement, (Right to Left, when MADCTL (36h) D6='1') '0' =Increment, (Left to Right, when MADCTL (36h) D6='1')
MV	Row/Column Exchange (MV)	'1' = Row/column exchange, (when MADCTL (36h) D5='1') '0' = Normal, (when MADCTL (36h) D5='0')
ML	Scan Address Order (ML)	'1' =Decrement, (LCD refresh Top to Bottom, when MADCTL (36h) D4='1') '0'=Increment, (LCD refresh Bottom to Top, when MADCTL (36h) D4='0')
RGB	RGB/ BGR Order (RGB)	'1' =BGR, (When MADCTL (36h) D3='1') '0' =RGB, (When MADCTL (36h) D3='0')
ST24	For Future Use	'0'
ST23	For Future Use	'0'
IFPF2 IFPF1 IFPF0	Interface Color Pixel Format Definition	"011" = 12-bit / pixel, "101" = 16-bit / pixel, "110" = 18-bit / pixel, others are no define
IDMON	Idle Mode On/Off	'1' = On, "0" = Off
PTLON	Partial Mode On/Off	'1' = On, "0" = Off
SLPOUT	Sleep In/Out	'1' = Out, "0" = In
NORON	Display Normal Mode On/Off	'1' = Normal Display, '0' = Partial Display
VSSON	Vertical Scrolling Status	'1' = Scroll on,"0" = Scroll off
ST14	Horizontal Scroll Status	'0'
INVON	Inversion Status	'1' = On, "0" = Off
ST12	All Pixels On (Not Used)	'0'
ST11	All Pixels Off (Not Used)	'0'
DISON	Display On/Off	'1' = On, "0" = Off
TEON	Tearing effect line on/off	'1' = On, "0" = Off
GCSEL2 GCSEL1 GCSEL0	Gamma Curve Selection	"000" = GC0 "001" = GC1 "010" = GC2 "011" = GC3 "100" to "111" = Not defined
TELOM	Tearing effect line mode	'0' = mode1, '1' = mode2
HSON	Horizontal Sync. (HS, RGB I/F)	'1' = On, '0' = Off
VSON	Vertical Sync, (VS, RGB I/F)	'1' = On, '0' = Off
PCLKON	Pixel Clock (PCLK, RGB I/F)	'1' = On, '0' = Off
DEON	Data Enable (DE, RGB I/F)	'1' = On, '0' = Off
ST0	For Future Use	'0'

Note: ST0, ST5, ST9, ST11-ST15, ST19, ST23, ST24 are set to '0', when RGB I/F.

Default	Status	Default Value (ST31 to ST0)			
		ST[31-24]	ST[23-16]	ST[15-8]	ST[7-0]
	Power On Sequence	0000-0000	0110-0001	0000-0000	0000-0000
	S/W Reset	0xxx0xx00	0xxx-0001	0000-0000	0000-0000
	H/W Reset	0000-0000	0110-0001	0000-0000	0000-0000

10.1.5 RDDPM (0Ah): Read Display Power Mode

0AH	RDDPM (Read Display Power Mode)												
Inst / Para	D/CX	WRX	RDX	D17-8	D7	D6	D5	D4	D3	D2	D1	D0	(Code)
RDDPM	0	↑	1	-	0	0	0	0	1	0	1	0	(0Ah)
1st Parameter	1	1	↑	-	-	-	-	-	-	-	-	-	-
2nd Parameter	1	1	↑		BSTON	IDMON	PTLON	SLPOUT	NORON	DISON	D1	D0	

NOTE: "-" Don't care, can be set to VDDI or DGND level

Description

This command indicates the current status of the display as described in the table below:

Bit	Description	Value
BSTON	Booster Voltage Status	'1' =Booster on, '0' =Booster off
IDMON	Idle Mode On/Off	'1' = Idle Mode On, '0' = Idle Mode Off
PTLON	Partial Mode On/Off	'1' = Partial Mode On, '0' = Partial Mode Off
SLPON	Sleep In/Out	'1' = Sleep Out, '0' = Sleep In
NORON	Display Normal Mode On/Off	'1' = Normal Display, '0' = Partial Display
DISON	Display On/Off	'1' = Display On, '0' = Display Off
D1	Not Used	'0'
D0	Not Used	'0'

Default

Status	Default Value (D7 to D0)
Power On Sequence	0000_1000(08h)
S/W Reset	0000_1000(08h)
H/W Reset	0000_1000(08h)

10.1.6 RDDMADCTL (0Bh): Read Display MADCTL

0BH	RDDMADCTL (Read Display MADCTL)												
Inst / Para	D/CX	WRX	RDX	D17-8	D7	D6	D5	D4	D3	D2	D1	D0	(Code)
RDDMADCTL	0	↑	1	-	0	0	0	0	1	0	1	1	(0Bh)
1st Parameter	1	1	↑	-	-	-	-	-	-	-	-	-	-
2nd Parameter	1	1	↑		MY	MX	MV	ML	RGB	-	D1	D0	

NOTE: "-" Don't care, can be set to VDDI or DGND level

Description

This command indicates the current status of the display as described in the table below:

Bit	Description	Value
MX	Row Address Order	'1' = Bottom to Top (When MADCTL B7='1') '0' = Top to Bottom (When MADCTL B7='0')
MY	Column Address Order	'1' = Right to Left (When MADCTL B6='1') '0' = Left to Right (When MADCTL B6='0')
MV	Row/Column Order (MV)	'1' = Row/column exchange (MV=1) '0' = Normal (MV=0)
ML	Vertical Refresh Order	'1' =LCD Refresh Bottom to Top '0' =LCD Refresh Top to Bottom
RGB	RGB/BGR Order	'1' =BGR, "0"=RGB
D1	Not Used	'0'
D0	Not Used	'0'

Default	Status	Default Value (D7 to D0)
	Power On Sequence	0000_0000 (00h)
	S/W Reset	No change
	H/W Reset	0000_0000 (00h)

10.1.7 RDDCOLMOD (0Ch): Read Display Pixel Format

0CH	RDDCOLMOD (Read Display Pixel Format)												
Inst / Para	D/CX	WRX	RDX	D17-8	D7	D6	D5	D4	D3	D2	D1	D0	(Code)
RDDCOLMOD	0	↑	1	-	0	0	0	0	1	1	0	0	(0Ch)
1st Parameter	1	1	↑	-	-	-	-	-	-	-	-	-	-
2nd Parameter	1	1	↑	-	VIPF3	VIPF2	VIPF1	VIPF0	-	IFPF2	IFPF1	IFPF0	

NOTE: "-" Don't care, can be set to VDDI or DGND level

Description

This command indicates the current status of the display as described in the table below:

IFPF[2:0]		MCU Interface Color Format
011	3	12-bit/pixel
101	5	16-bit/pixel
110	6	18-bit/pixel
111	7	No used

Others are no define and invalid

VIFPF[2:0]		RGB Interface Color Format
0101	5	16-bit/pixel (1-times data transfer)
0110	6	18-bit/pixel (1-times data transfer)
0111	7	No used
1110	14	18-bit/pixel (3-times data transfer)

Others are no define and invalid

Default

Status	Default Value	
	IFPF[2:0]	VIPF[3:0]
Power On Sequence	0110 (18 bits/pixel)	0110 (18 bits/pixel)
S/W Reset	No Change	No Change
H/W Reset	0110 (18 bits/pixel)	0110 (18 bits/pixel)

10.1.8 RDDIM (0Dh): Read Display Image Mode

0DH	RDDIM (0Dh): Read Display Image Mode												
Inst / Para	D/CX	WRX	RDX	D17-8	D7	D6	D5	D4	D3	D2	D1	D0	(Code)
RDDIM	0	↑	1	-	0	0	0	0	1	1	0	1	(0Dh)
1st Parameter	1	1	↑	-	-	-	-	-	-	-	-	-	-
2nd Parameter	1	1	↑	-	VSSON	D6	INVON	D4	D3	GCS2	GCS1	GCS0	

NOTE: "-" Don't care, can be set to VDDI or DGND level

Description

This command indicates the current status of the display as described in the table below:

Bit	Description	Value
VSSON	Vertical Scrolling On/Off	"1" = Vertical scrolling is On, "0" = Vertical scrolling is Off
D6	Horizontal Scrolling On/Off	"0" (Not used)
INVON	Inversion On/Off	"1" = Inversion is On, "0" = Inversion is Off
D4	All Pixels On	"0" (Not used)
D3	All Pixels Off	"0" (Not used)
GCS2 GCS1 GCS0	Gamma Curve Selection	"000" = GC0, "001" = GC1, "010" = GC2, "011" = GC3, "100" to "111" = Not defined

Default

Status	Default Value(D7 to D0)
Power On Sequence	0000_0000 (00h)
S/W Reset	0000_0000 (00h)
H/W Reset	0000_0000 (00h)

10.1.9 RDDSM (0Eh): Read Display Signal Mode

0EH	RDDSM (0Eh): Read Display Signal Mode												
Inst / Para	D/CX	WRX	RDX	D17-8	D7	D6	D5	D4	D3	D2	D1	D0	(Code)
RDDSM	0	↑	1	-	0	0	0	0	1	1	1	0	(0Eh)
1st Parameter	1	1	↑	-	-	-	-	-	-	-	-	-	-
2nd Parameter	1	1	↑	-	TEON	TELOM	HSON	VSON	PCKON	DEON	D1	D0	

NOTE: "-" Don't care, can be set to VDDI or DGND level

Description

This command indicates the current status of the display as described in the table below:

Bit	Description	Value
TEON	Tearing Effect Line On/Off	"1" = On, "0" = Off
TELOM	Tearing effect line mode	"1" = mode1, "0" = mode2
HSON	Horizontal Sync. (RGB I/F) On/Off	"1" = On, "0" = Off
VSON	Vertical Sync. (RGB I/F) On/Off	"1" = On, "0" = Off
PCKON	Pixel Clock (PCLK, RGB I/F) On/Off	"1" = On, "0" = Off
DEON	Data Enable (DE, RGB I/F) On/Off	"1" = On, "0" = Off
D1	Not Used	"1" = On, "0" = Off
D0	Not Used	"1" = On, "0" = Off

Default

Status	Default Value(D7~D0)
Power On Sequence	0000_0000 (00h)
S/W Reset	0000_0000 (00h)
H/W Reset	0000_0000 (00h)

10.1.10 RDDSDR (0Fh): Read Display Self-Diagnostic Result

0FH	RDDSDR (0Fh): Read Display Self-Diagnostic Result												
Inst / Para	D/CX	WRX	RDX	D17-8	D7	D6	D5	D4	D3	D2	D1	D0	(Code)
RDDSDR	0	↑	1	-	0	0	0	0	1	1	1	1	(0Fh)
1st Parameter	1	1	↑	-	-	-	-	-	-	-	-	-	-
2nd Parameter	1	1	↑	-	RELD	FUND	ATTD	BRD	D3	D2	D1	D0	

NOTE: "-" Don't care, can be set to VDDI or DGND level

Description

This command indicates the current status of the display as described in the table below:

Bit	Description	Value
RELD	Register Loading Detection	See section 9.20
FUND	Functionality Detection	See section 9.20
ATTD	Chip Attachment Detection	See section 9.20
BRD	Display Glass Break Detection	See section 9.20
D3	Not Used	"0"
D2	Not Used	"0"
D1	Not Used	"0"
D0	Not Used	"0"

Default

Status	Default Value(D7~D0)
Power On Sequence	0000_0000 (00h)
S/W Reset	0000_0000 (00h)
H/W Reset	0000_0000 (00h)

10.1.11 SLPIN (10h): Sleep In

10H	SLPIN (Sleep In)												
Inst / Para	D/CX	WRX	RDX	D17-8	D7	D6	D5	D4	D3	D2	D1	D0	(Code)
SLPIN	0	↑	1	-	0	0	0	1	0	0	0	0	(10h)
1st Parameter	No parameter												-

NOTE: "-" Don't care, can be set to VDDI or DGND level

Description

-This command causes the LCD module to enter the minimum power consumption mode.
-In this mode the DC/DC converter is stopped, Internal display oscillator is stopped, and panel scanning is stopped.

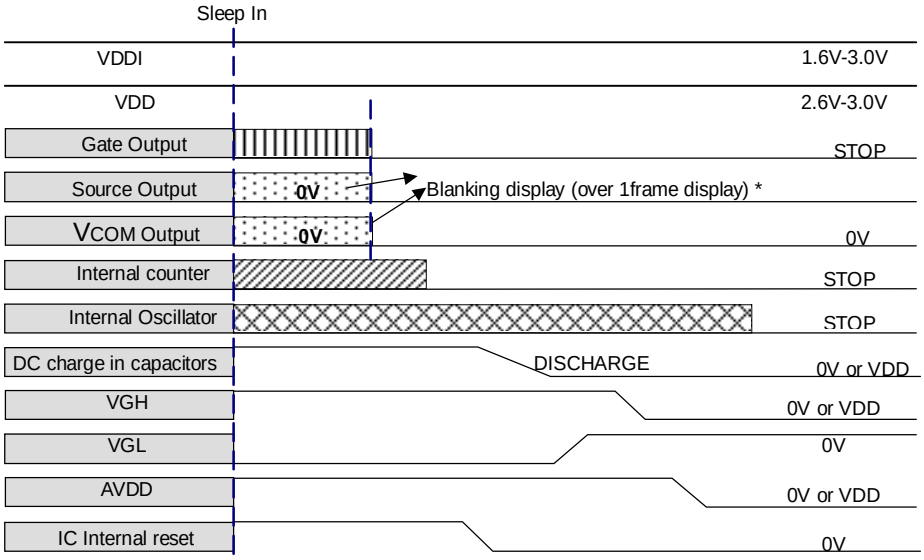

* Note: complete 1 frame display (ex: continue 2-falling edges of VS)

Restriction

-This command has no effect when module is already in sleep in mode. Sleep In Mode can only be exit by the Sleep Out Command (11h).
-When IC is in Sleep Out or Display On mode, it is necessary to wait 120msec before sending next command because of the stabilization timing for the supply voltages and clock circuits.

Default

Status	Default Value
Power On Sequence	Sleep in mode
S/W Reset	Sleep in mode
H/W Reset	Sleep in mode

10.1.12 SLPOUT (11h): Sleep Out

11H	SLPOUT (Sleep Out)												
Inst / Para	D/CX	WRX	RDX	D17-8	D7	D6	D5	D4	D3	D2	D1	D0	(Code)
SLPOUT	0	↑	1	-	0	0	0	1	0	0	0	1	(11h)
1st Parameter	No Parameter												-

NOTE: "-" Don't care, can be set to VDDI or DGND level

Description

-This command turns off sleep mode.
-In this mode the DC/DC converter is enabled, Internal display oscillator is started, and panel scanning is started.

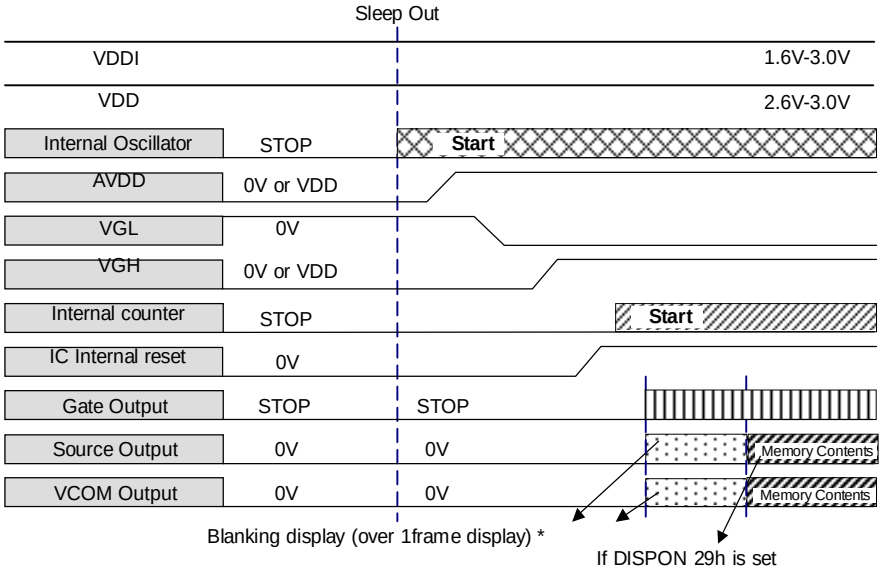

* Note: complete 1 frame display (ex: continue 2-falling edges of VS)

Restriction

-This command has no effect when module is already in sleep out mode. Sleep Out Mode can only be exit by the Sleep In Command (10h).
-When IC is in Sleep In mode, it is necessary to wait 120msec before sending next command because of the stabilization timing for the supply voltages and clock circuits.
-When IC is in Sleep Out or Display On mode, it is necessary to wait 120msec before sending next command due to the download of default value of registers and the execution of self-diagnostic function.

Default

Status	Default Value
Power On Sequence	Sleep in mode
S/W Reset	Sleep in mode
H/W Reset	Sleep in mode

10.1.13 PTLON (12h): Partial Display Mode On

12H	PTLON (12h): Partial Display Mode On												
Inst / Para	D/CX	WRX	RDX	D17-8	D7	D6	D5	D4	D3	D2	D1	D0	(Code)
PTLON	0	↑	1	-	0	0	0	1	0	0	1	0	(12h)
1st Parameter	No Parameter												-

NOTE: "-" Don't care, can be set to VDDI or DGND level

Description	-This command turns on Partial mode. The partial mode window is described by the Partial Area command (30h) -To leave Partial mode, the Normal Display Mode On command (13H) should be written.
Default	Status: Power On Sequence — Default Value: Normal Mode On Status: S/W Reset — Default Value: Normal Mode On Status: H/W Reset — Default Value: Normal Mode On

10.1.14 NORON (13h): Normal Display Mode On

13H	NORON (Normal Display Mode On)												
Inst / Para	D/CX	WRX	RDX	D17-8	D7	D6	D5	D4	D3	D2	D1	D0	(Code)
NORON	0	↑	1	-	0	0	0	1	0	0	1	1	(13h)
1st Parameter	No Parameter												-

NOTE: "-" Don't care, can be set to VDDI or DGND level

Description	-This command returns the display to normal mode. -Normal display mode on means Partial mode off, Scroll mode Off. -Exit from NORON by the Partial mode On command (12h)
Default	Status: Power On Sequence — Default Value: Normal Mode On Status: S/W Reset — Default Value: Normal Mode On Status: H/W Reset — Default Value: Normal Mode On

10.1.15 INVOFF (20h): Display Inversion Off

20H	IVNOFF (Normal Display Mode Off)												
Inst / Para	D/CX	WRX	RDX	D17-8	D7	D6	D5	D4	D3	D2	D1	D0	(Code)
INVOFF	0	↑	1	-	0	0	1	0	0	0	0	0	(20h)
1st Parameter	No Parameter												-

NOTE: "-" Don't care, can be set to VDDI or DGND level

Description	-This command is used to recover from display inversion mode. (Example) 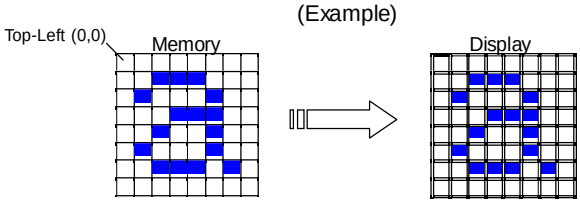
Default	Status: Power On Sequence — Default Value: Display Inversion off Status: S/W Reset — Default Value: Display Inversion off Status: H/W Reset — Default Value: Display Inversion off

10.1.16 INVON (21h): Display Inversion On

21H	IVNOFF (Display Inversion On)												
Inst / Para	D/CX	WRX	RDX	D17-8	D7	D6	D5	D4	D3	D2	D1	D0	(Code)
INVON	0	↑	1	-	0	0	1	0	0	0	0	1	(21h)
1st Parameter	No Parameter												-

NOTE: "-" Don't care, can be set to VDDI or DGND level

Description

-This command is used to enter into display inversion mode
-To exit from Display Inversion On, the Display Inversion Off command (20h) should be written.

(Example)

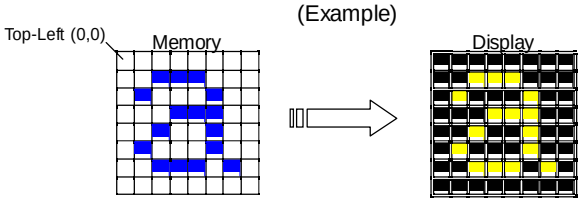

Default

Status	Default Value
Power On Sequence	Display Inversion off
S/W Reset	Display Inversion off
H/W Reset	Display Inversion off

10.1.17 GAMSET (26h): Gamma Set

26H	GAMSET (Gamma Set)												
Inst / Para	D/CX	WRX	RDX	D17-8	D7	D6	D5	D4	D3	D2	D1	D0	(Code)
GAMSET	0	↑	1	-	0	0	1	0	0	1	1	0	(26h)
1st Parameter	1	↑	1	-	-	-	-	-	GC3	GC2	GC1	GC0	

NOTE: "-" Don't care, can be set to VDDI or DGND level

Description

-This command is used to select the desired Gamma curve for the current display. A maximum of 4 curves can be selected. The curves are defined in section 9.17 The curve is selected by setting the appropriate bit in the parameter as described in the Table.

GC [7:0]	Parameter	Curve Selected	
		GS=1	GS=0
01h	GC0	Gamma Curve 1 (G2.2)	Gamma Curve 1 (G1.0)
02h	GC1	Gamma Curve 2 (G1.8)	Gamma Curve 2 (G2.5)
04h	GC2	Gamma Curve 3 (G2.5)	Gamma Curve 3 (G2.2)
08h	GC3	Gamma Curve 4 (G1.0)	Gamma Curve 4 (G1.8)

Note: All other values are undefined.

Default

Status	Default Value
Power On Sequence	01h
S/W Reset	01h
H/W Reset	01h

10.1.18 DISPOFF (28h): Display Off

28H	DISPOFF (Display Off)												
Inst / Para	D/CX	WRX	RDX	D17-8	D7	D6	D5	D4	D3	D2	D1	D0	(Code)
DISPOFF	0	↑	1	-	0	0	1	0	1	0	0	0	(28h)
1st Parameter	No Parameter												-

NOTE: "-" Don't care, can be set to VDDI or DGND level

Description

-This command is used to enter into DISPLAY OFF mode. In this mode, the output from Frame Memory is disables and blank page inserted.
-Exit from this command by Display On (29h)
-When IC is in Display On mode, it is necessary to wait 50msec before sending next command.

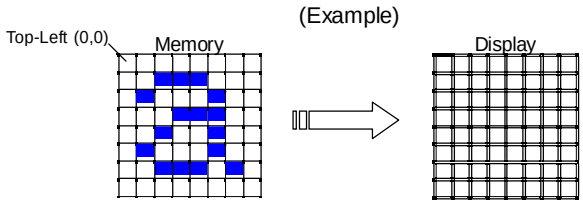

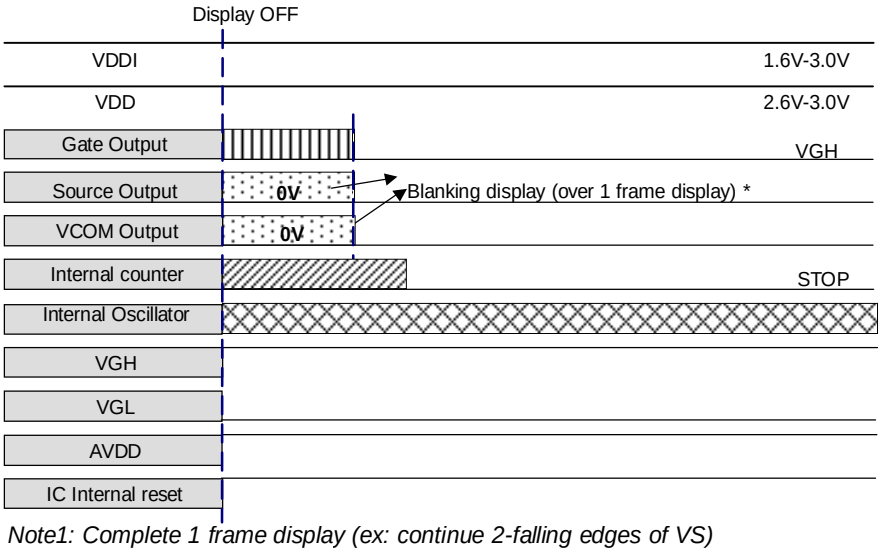

Note1: Complete 1 frame display (ex: continue 2-falling edges of VS)

Note2: Please use command 28h (display off) combined with command 10h (sleep in) to make module into display off status. Please check the application note of ST7732 when using display off function.

Default

Status	Default Value
Power On Sequence	Display off
S/W Reset	Display off
H/W Reset	Display off

10.1.19 DISPON (29h): Display On

29H	DISPON (Display On)												
Inst / Para	D/CX	WRX	RDX	D17-8	D7	D6	D5	D4	D3	D2	D1	D0	(Code)
DISPON	0	↑	1	-	0	0	1	0	1	0	0	1	(29h)
1st Parameter	No Parameter												-

NOTE: "-" Don't care, can be set to VDDI or DGND level

Description

-This command is used to recover from DISPLAY OFF mode. Output from the Frame Memory is enabled.

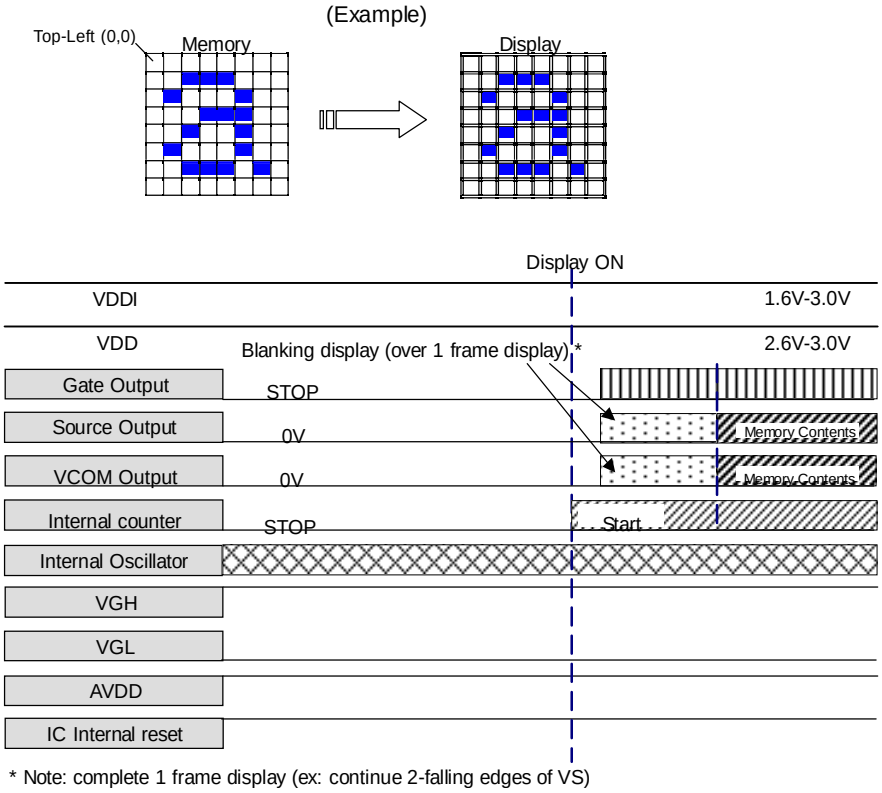

Default

Status	Default Value
Power On Sequence	Display off
S/W Reset	Display off
H/W Reset	Display off

10.1.20 CASET (2Ah): Column Address Set

2AH	CASET(Colume Address Set)_												
Inst / Para	D/CX	WRX	RDX	D17-8	D7	D6	D5	D4	D3	D2	D1	D0	(Code)
GAMSET	0	↑	1	-	0	0	1	0	0	1	1	0	(2Ah)
1st Parameter	1	↑	1	-	-	-	-	-	-	-	-	-	
2nd Parameter	1	↑	1	-	XS7	XS6	XS5	XS4	XS3	XS2	XS1	XS0	
3rd Parameter	1	↑	1	-	-	-	-	-	-	-	-	-	
4th Parameter	1	↑	1	-	XE7	XE6	XE5	XE4	XE3	XE2	XE1	XE0	

NOTE: "-" Don't care, can be set to VDDI or DGND level

Description

-The value of XS [7:0] and XE [7:0] are referred when RAMWR command comes.
-Each value represents one column line in the Frame Memory.

(Example)

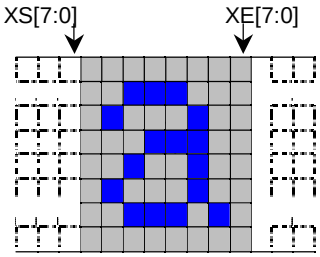

Restriction

XS [7:0] always must be equal to or less than XE [7:0]
When XS [7:0] or XE [7:0] is greater than maximum address like below, data of out of range will be ignored.
1. 128X160 memory base (GM = '00')
(Parameter range: 0 ≦ XS [7:0] ≦ XE [7:0] ≦127 (007Fh)): MV="0"
(Parameter range: 0 ≦ XS [7:0] ≦ XE [7:0] ≦159 (009Fh)): MV="1"
2. 120x160 memory base (GM = '01')
(Parameter range: 0 ≦ XS [7:0] ≦ XE [7:0] ≦119 (0077h)): MV="0"
(Parameter range: 0 ≦ XS [7:0] ≦ XE [7:0] ≦159 (009Fh)): MV="1"
3. 132x162 memory base (GM = '11')
(Parameter range: 0 ≦ XS [7:0] ≦ XE [7:0] ≦131 (0083h)): MV="0"
(Parameter range: 0 ≦ XS [7:0] ≦ XE [7:0] ≦161 (00A1h)): MV="1"

Default

GM Status	Status	Default Value		
		XS [7:0]	XE [7:0] (MV='**0** ')	XE [7:0] (MV='**1**')
GM='00' (128x160 memory base)	Power On Sequence	0000h	007Fh (127)	
	S/W Reset	0000h	007Fh (127)	009Fh (159)
	H/W Reset	0000h	007Fh (127)	
GM='01' (120x160 memory base)	Power On Sequence	0000h	0077h (119)	
	S/W Reset	0000h	0077h (119)	009Fh (159)
	H/W Reset	0000h	0077h (119)	
GM='11' (132x162 memory base)	Power On Sequence	0000h	0083h (131)	
	S/W Reset	0000h	0083h (131)	00A1h (161)
	H/W Reset	0000h	0083h (131)	

10.1.21 RASET (2Bh): Row Address Set

2BH	RASET (Row Address Set)												
Inst / Para	D/CX	WRX	RDX	D17-8	D7	D6	D5	D4	D3	D2	D1	D0	(Code)
RASET (2Bh)	0	↑	1	-	0	0	1	0	1	0	1	1	(2Bh)
1st Parameter	1	↑	1	-	-	-	-	-	-	-	-	-	
2nd Parameter	1	↑	1	-	YS7	YS6	YS5	YS4	YS3	YS2	YS1	YS0	
3rd Parameter	1	↑	1	-	-	-	-	-	-	-	-	-	
4th Parameter	1	↑	1	-	YE7	YE6	YE5	YE4	YE3	YE2	YE1	YE0	

NOTE: "-" Don't care, can be set to VDDI or DGND level

Description

The value of YS [7:0] and YE [7:0] are referred when RAMWR command comes.
Each value represents one column line in the Frame Memory.

Example

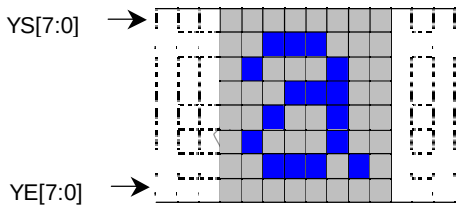

Restriction

YS [7:0] always must be equal to or less than YE [7:0]
When YS [7:0] or YE [7:0] are greater than maximum row address like below, data of out of range will be ignored.
1. 128X160 memory base (GM = '00')
(Parameter range: 0 ≤YS [7:0] ≤YE [7:0] ≤159 (009Fh)): MV="0"
(Parameter range: 0 ≤YS [7:0] ≤YE [7:0] ≤127 (007Fh)): MV="1"
2. 120x160 memory base (GM = '01')
(Parameter range: 0 ≤YS [7:0] ≤YE [7:0] ≤159 (009Fh)): MV="0"
(Parameter range: 0 ≤YS [7:0] ≤YE [7:0] ≤119 (0077h)): MV="1"
3. 132X162 memory base (GM = '11')
(Parameter range: 0 ≤YS [7:0] ≤YE [7:0] ≤161 (00A1h)): MV="0"
(Parameter range: 0 ≤YS [7:0] ≤YE [7:0] ≤131 (0083h)): MV="1"

Default

GM status	Status	Default Value		
		YS [7:0]	YE [7:0] (MV='**0** ')	YE [7:0] (MV='**1**')
GM='00' (128x160 memory base)	Power On Sequence	0000h	009Fh (159)	
	S/W Reset	0000h	009Fh (159)	007Fh (127)
	H/W Reset	0000h	009Fh (159)	
GM='01' (120x160 memory base)	Power On Sequence	0000h	009Fh (159)	
	S/W Reset	0000h	009Fh (159)	0077h (119)
	H/W Reset	0000h	009Fh (159)	
GM='11' (132x162 memory base)	Power On Sequence	0000h	00A1h (161)	
	S/W Reset	0000h	00A1h (161)	0083h (131)
	H/W Reset	0000h	00A1h (161)	

10.1.22 RAMWR (2Ch): Memory Write

2CH	RAMWR (Memory Write)												
Inst / Para	D/CX	WRX	RDX	D17-8	D7	D6	D5	D4	D3	D2	D1	D0	(Code)
RAMWR	0	↑	1	-	0	0	1	0	1	1	0	0	(2Ch)
1st Parameter	1	↑	1	D17-8	D7	D6	D5	D4	D3	D2	D1	D0	-
|	1	↑	1	|	|	|	|	|	|	|	|	|	|
Nth Parameter	1	↑	1	D17-8	D7	D6	D5	D4	D3	D2	D1	D0	-

NOTE: "-" Don't care, can be set to VDDI or DGND level

Description	-When this command is accepted, the column register and the row register are reset to the Start Column/Start Row positions. -The Start Column/Start Row positions are different in accordance with MADCTL setting. (See section 9.12) -Sending any other command can stop Frame Write. In all color modes, there is no restriction on length of parameters. -1. 128X160 memory base (GM = '00') 128x160x18-bit memory can be written by this command Memory range: (0000h,0000h) -> (007Fh, 09Fh) -2. 120x160 memory base (GM = '01') 120x160x18-bit memory can be written on this command. Memory range: (0000h,0000h) -> (0077h,09Fh) -3. 132x162 memory base (GM = '11') 132x162x18-bit memory can be written on this command. Memory range: (0000h,0000h) -> (0083h,00A1h)
Default	

Status	Default Value
Power On Sequence	Contents of memory is set randomly
S/W Reset	Contents of memory is not cleared
H/W Reset	Contents of memory is not cleared

10.1.23 RAMHD (2Eh): Memory Read

2EH	RAMHD (Memory Read)												
Inst / Para	D/CX	WRX	RDX	D17-8	D7	D6	D5	D4	D3	D2	D1	D0	(Code)
RAMHD	0	↑	1	-	0	0	1	0	1	1	1	0	(2Eh)
1st Parameter	1	1	↑	-	-	-	-	-	-	-	-	-	-
2nd Parameter	1	1	↑	D17-8	D7	D6	D5	D4	D3	D2	D1	D0	-
|	1	1	↑	|	|	|	|	|	|	|	|	|	|
(N+1)th Parameter	1	1	↑	D17-8	D7	D6	D5	D4	D3	D2	D1	D0	-

NOTE: "-" Don't care, can be set to VDDI or DGND level

Description	-This command is used to transfer data from frame memory to MCU. -When this command is accepted, the column register and the row register are reset to the Start Column/Start Row positions. -The Start Column/Start Row positions are different in accordance with MADCTL setting. (See section 9.12) -Then D[17:0] is read back from the frame memory and the column register and the row register incremented as section 9.10.2. -Frame Read can be cancelled by sending any other command. -The data color coding is fixed to 18-bit in reading function. Please see section 9.8 "Data color coding" for color coding (18-bit cases), when there is used 8, 9, 16 and 18-bit data lines for image data. *Note1: The Command 3Ah should be set to 66h when reading pixel data from frame memory.Please check the LUT in chapter 9.19 when using memory read function.*
Default	

Status	Default Value
Power On Sequence	Contents of memory is set randomly
S/W Reset	Contents of memory is not cleared
H/W Reset	Contents of memory is not cleared

10.1.25 PTLAR (30h): Partial Area

30H	PTLAR (Partial Area)												
Inst / Para	D/CX	WRX	RDX	D17-8	D7	D6	D5	D4	D3	D2	D1	D0	(Code)
PTLAR	0	↑	1	-	0	0	1	1	0	0	0	0	(30h)
1st Parameter	1	↑	1	-	-	-	-	-	-	-	-	-	
2nd Parameter	1	↑	1	-	PSL7	PSL6	PSL5	PSL4	PSL3	PSL2	PSL1	PSL0	
3rd Parameter	1	↑	1	-	-	-	-	-	-	-	-	-	
4th Parameter	1	↑	1	-	PEL7	PEL6	PEL5	PEL4	PEL3	PEL2	PEL1	PEL0	

NOTE: "-" Don't care, can be set to VDDI or DGND level

Description

-This command defines the partial mode's display area.
-There are 4 parameters associated with this command, the first defines the Start Row (PSL) and the second the End Row (PEL), as illustrated in the figures below. PSL and PEL refer to the Frame Memory row address counter.

-If End Row **>** Start Row, when MADCTL ML='0'

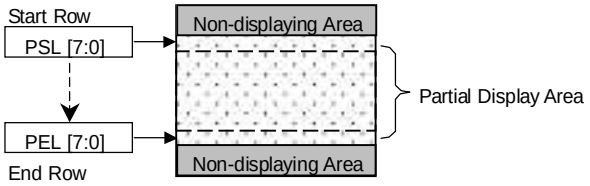

-If End Row **>** Start Row, when MADCTL ML='1'

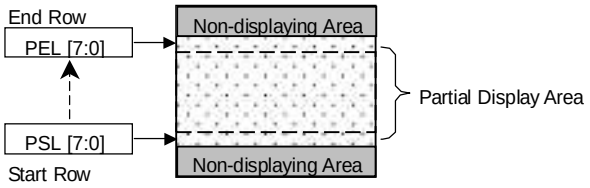

-If End Row **<** Start Row, when MADCTL ML='0'

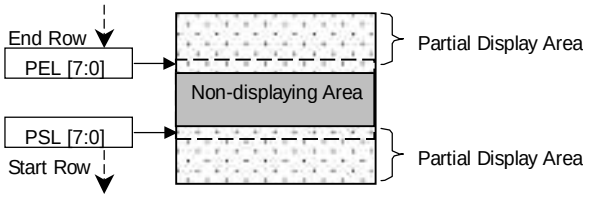

-If End Row = Start Row then the Partial Area will be one row deep.

Default

Status	Default Value		
	PSL [7:0]	PEL [7:0]	
		GM="00","01"	GM="11"
Power On Sequence	0000h	009Fh	00A1h
S/W Reset	0000h	009Fh	00A1h
H/W Reset	0000h	009Fh	00A1h

10.1.26 SCRLAR (33h): Scroll Area

33H	SCRLAR (Scrolll Area)												
Inst / Para	D/CX	WRX	RDX	D17-8	D7	D6	D5	D4	D3	D2	D1	D0	(Code)
PTLAR	0	↑	1	-	0	0	1	1	0	0	1	1	(33h)
1st Parameter	1	↑	1	-	-	-	-	-	-	-	-	-	
2nd Parameter	1	↑	1	-	TFA 7	TFA 6	TFA 5	TFA 4	TFA 3	TFA 2	TFA 1	TFA 0	
3rd Parameter	1	↑	1	-	-	-	-	-	-	-	-	-	
4th Parameter	1	↑	1	-	VSA 7	VSA 6	VSA 5	VSA 4	VSA 3	VSA 2	VSA 1	VSA 0	
5th Parameter	1	↑	1	-	-	-	-	-	-	-	-	-	
6th Parameter	1	↑	1	-	BFA 7	BFA 6	BFA 5	BFA 4	BFA 3	BFA 2	BFA 1	BFA 0	

NOTE: "-" Don't care, can be set to VDDI or DGND level

Description

-This command defines the Vertical Scrolling Area of the display.
When MADCTL ML=0
—The 1st & 2nd parameter TFA [7:0] describes the Top Fixed Area (in No. of lines from Top of the Frame Memory and Display).
—The 3rd & 4th parameter VSA [7:0] describes the height of the Vertical Scrolling Area (in No. of lines of the Frame Memory [not the display] from the Vertical Scrolling Start Address)
—The first line appears immediately after the bottom most line of the Top Fixed Area.
—The 5th & 6th parameter BFA [7:0] describes the Bottom Fixed Area (in No. of lines from Bottom of the Frame Memory and Display).
—TFA, VSA and BFA refer to the Frame Memory row address.

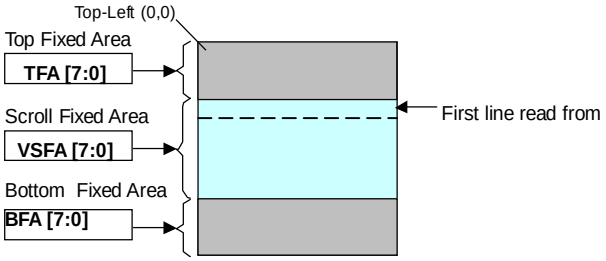

When MADCTL ML=1
—The 1st & 2nd parameter TFA [7:0] describes the Top Fixed Area (in No. of lines from Bottom of the Frame Memory and Display).
—The 3rd & 4th parameter VSA [7:0] describes the height of the Vertical Scrolling Area (in No. of lines of the Frame Memory [not the display] from the Vertical Scrolling Start Address)
—The first line appears immediately after the top most line of the Top Fixed Area.
—The 5th & 6th parameter BFA [7:0] describes the Bottom Fixed Area (in No. of lines from Top of the Frame Memory and Display).

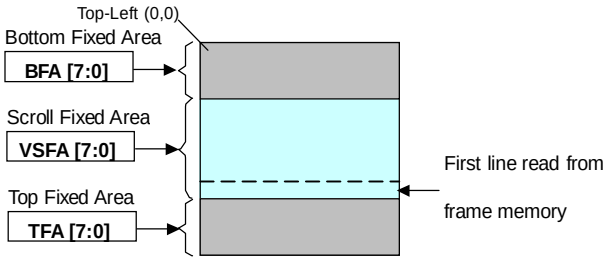

See Section 9.10.4 for details of the Memory to Display Mapping.

-The condition is 0≦(TFA+VSA+BFA) ≦162, otherwise Scrolling mode is undefined.

-In Vertical Scroll Mode, MADCTL parameter MV should be set to '0'-this only affects the Frame Memory Write.

Default

Status	Default Value			
	TFA [7:0]	VSA [7:0]		BFA [7:0]
		GM="00","01"	GM="11"	
Power On Sequence	0000h	00A0h	00A2h	0000h
S/W Reset	0000h	00A0h	00A2h	0000h
H/W Reset	0000h	00A0h	00A2h	0000h

Flow Chart

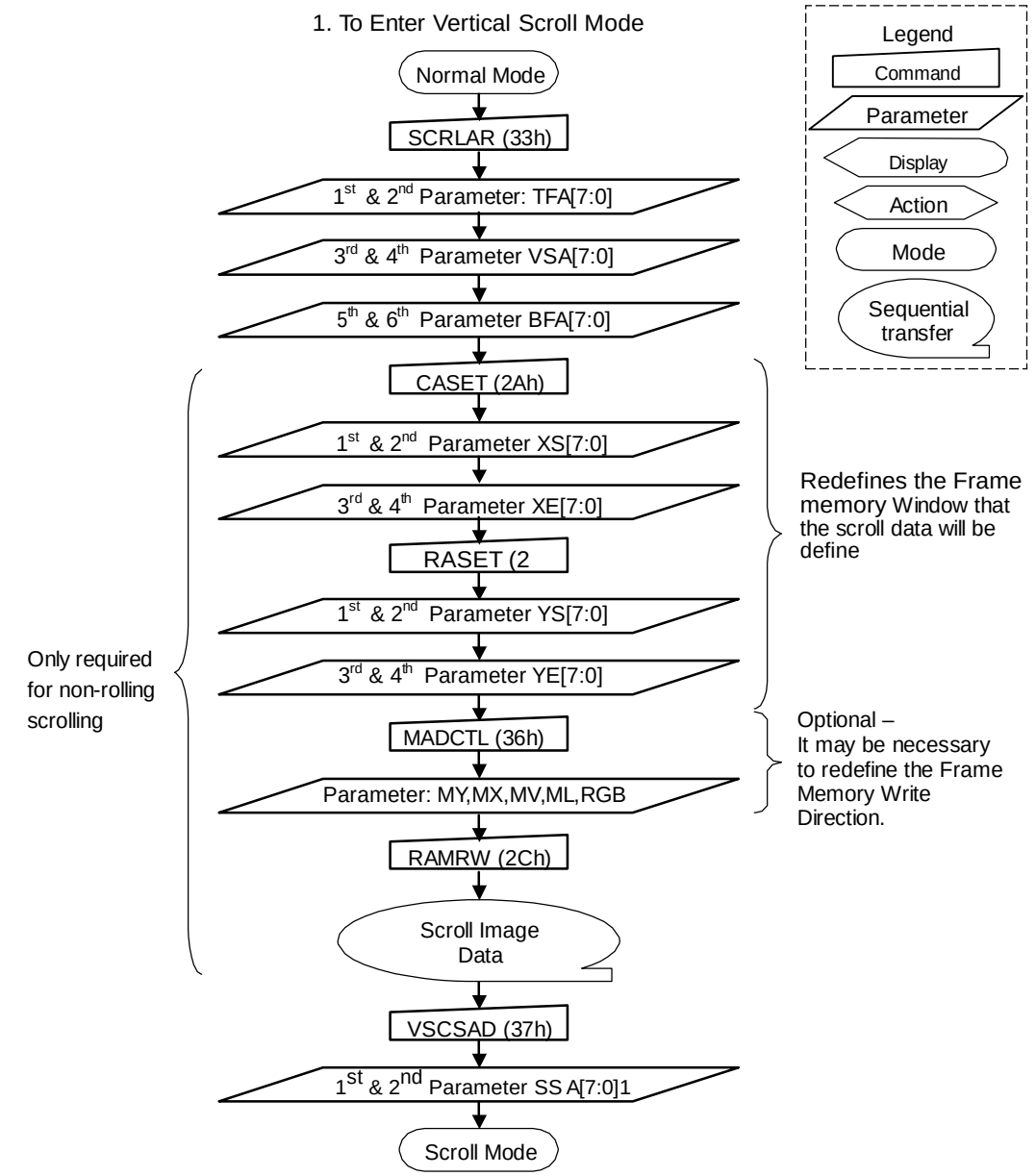

NOTE: The Frame Memory Window size must be defined correctly otherwise undesirable image will be displayed.

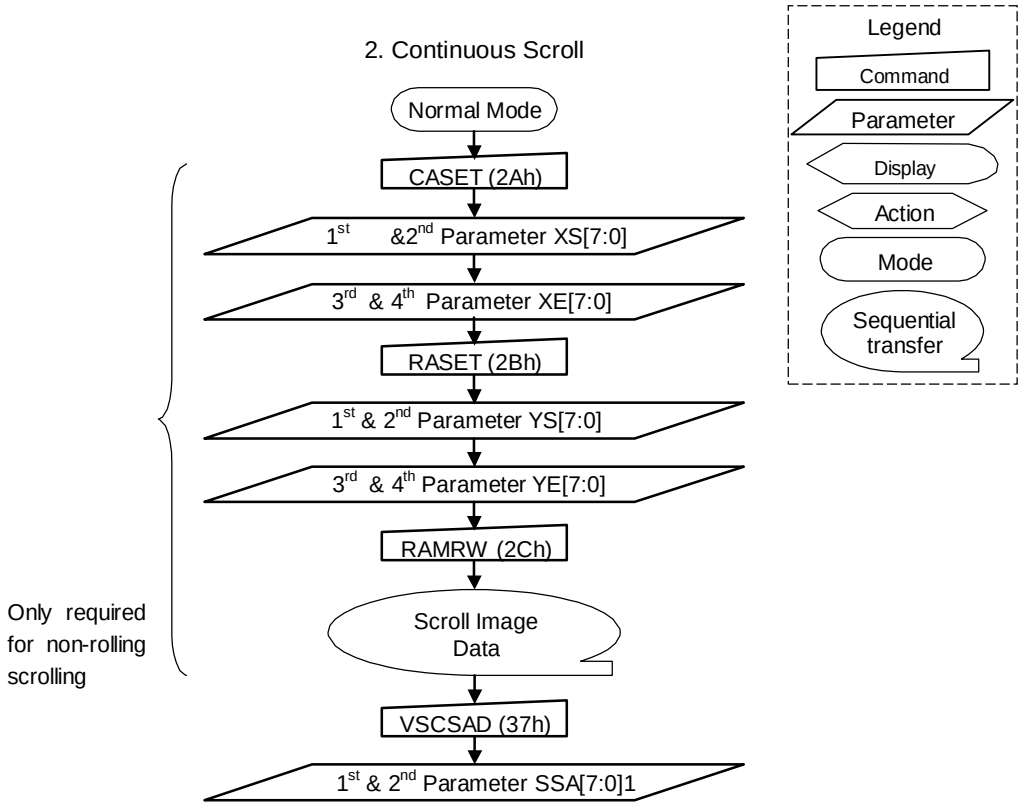

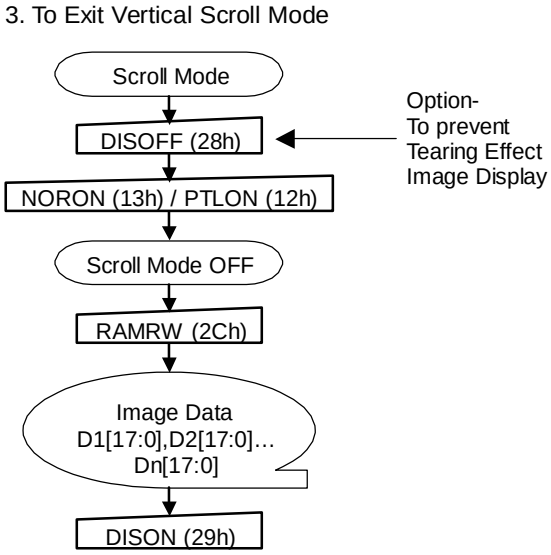

NOTE: Scroll Mode can be exit by both the Normal Display Mode On (13h) and Partial Mode On (12h) commands.

10.1.27 TEOFF (34h): Tearing Effect Line OFF

34H	TEOFF (Tearing Effect Line OFF)												
Inst / Para	D/CX	WRX	RDX	D17-8	D7	D6	D5	D4	D3	D2	D1	D0	(Code)
TEOFF	0	↑	1	-	0	0	1	1	0	1	0	0	(34h)
1st Parameter	No Parameter												-

NOTE: "-" Don't care, can be set to VDDI or DGND level

Description	-This command is used to turn OFF (Active Low) the Tearing Effect output signal from the TE signal line.
Default	Status / Default Value Power On Sequence: OFF S/W Reset: OFF H/W Reset: OFF

10.1.28 TEON (35h): Tearing Effect Line ON

35H	TEON (Tearing Effect Line ON)												
Inst / Para	D/CX	WRX	RDX	D17-8	D7	D6	D5	D4	D3	D2	D1	D0	(Code)
TEON	0	↑	1	-	0	0	1	1	0	1	0	1	(35h)
1st Parameter	1	↑	1	-	0	0	0	0	0	0	0	TELOM	

NOTE: "-" Don't care, can be set to VDDI or DGND level

Description

-This command is used to turn ON the Tearing Effect output signal from the TE signal line.
-This output is not affected by changing MADCTL bit ML.
-The Tearing Effect Line On has one parameter, which describes the mode of the Tearing Effect Output Line. ("-"=Don't Care).

—When TELOM='0':

The Tearing Effect Output line consists of V-Blanking information only.

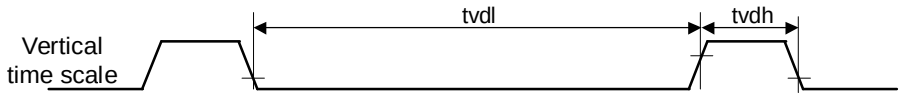

—When TELOM='1':

The Tearing Effect Output line consists of both V-Blanking and H-Blinking information.

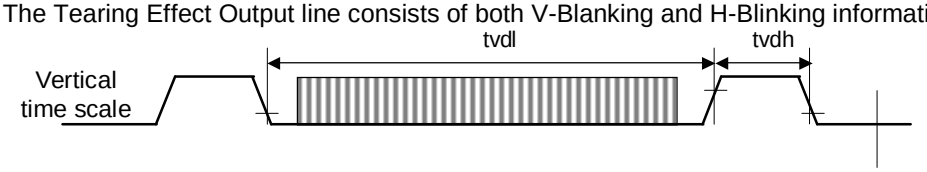

Note: During Sleep In Mode with Tearing Effect Line On, Tearing Effect Output pin will be active Low.

Default

Status	Default Value
Power On Sequence	Tearing effect off & TELOM=0
S/W Reset	Tearing effect off & TELOM=0
H/W Reset	Tearing effect off & TELOM=0

10.1.29 MADCTL (36h): Memory Data Access Control

36H	MADCTL (Memory Data Access Control)												
Inst / Para	D/CX	WRX	RDX	D17-8	D7	D6	D5	D4	D3	D2	D1	D0	(Code)
MADCTL	0	↑	1	-	0	0	1	1	0	1	1	0	(36h)
1st Parameter	1	↑	1	-	MY	MX	MV	ML	RGB	-	-	-	

NOTE: "-" Don't care, can be set to VDDI or DGND level

Description

-This command defines read/ write scanning direction of frame memory.

-Bit Assignment

Bit	NAME	DESCRIPTION
MY	Row Address Order	These 3bits controls MCU to memory write/read direction. (See Section 9.12)
MX	Column Address Order	
MV	Row/Column Exchange	
ML	Vertical Refresh Order	LCD vertical refresh direction control '0' = LCD vertical refresh Top to Bottom '1' = LCD vertical refresh Bottom to Top
RGB	RGB-BGR ORDER	Color selector switch control '0' =RGB color filter panel, '1' =BGR color filter panel)

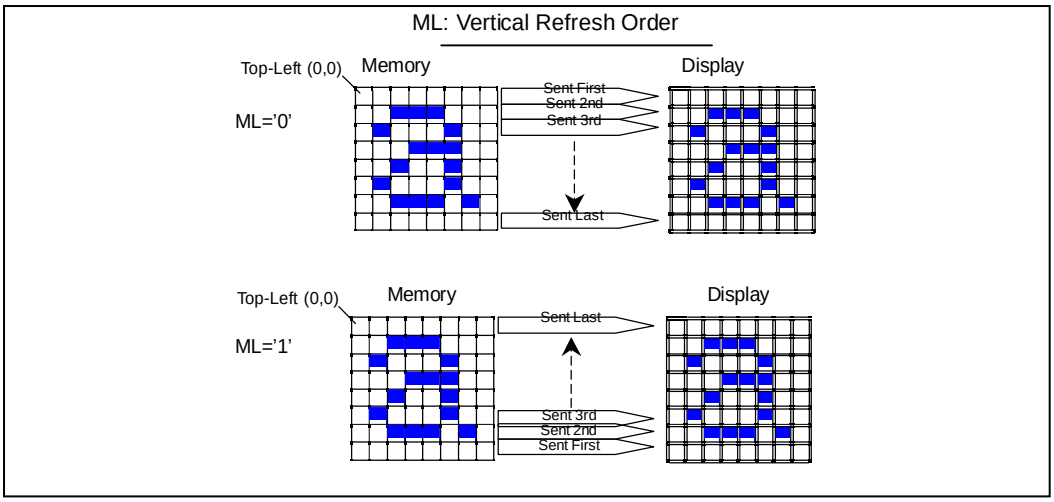

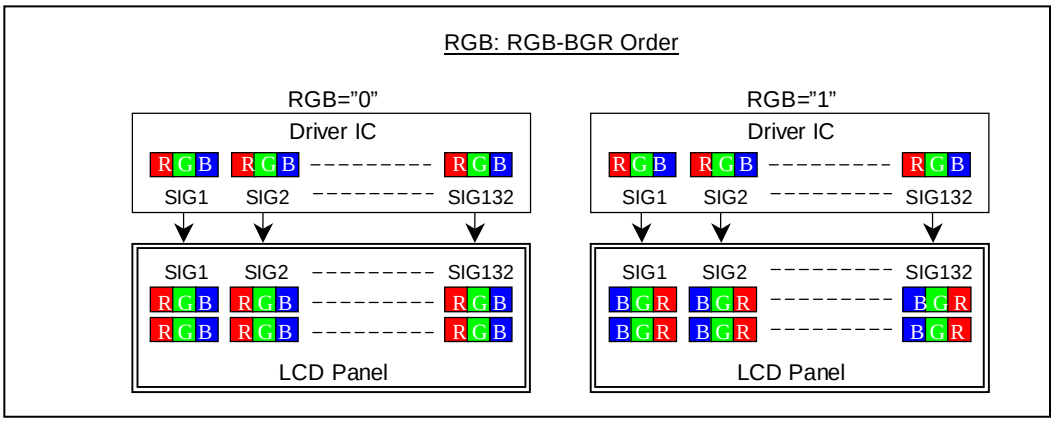

Description

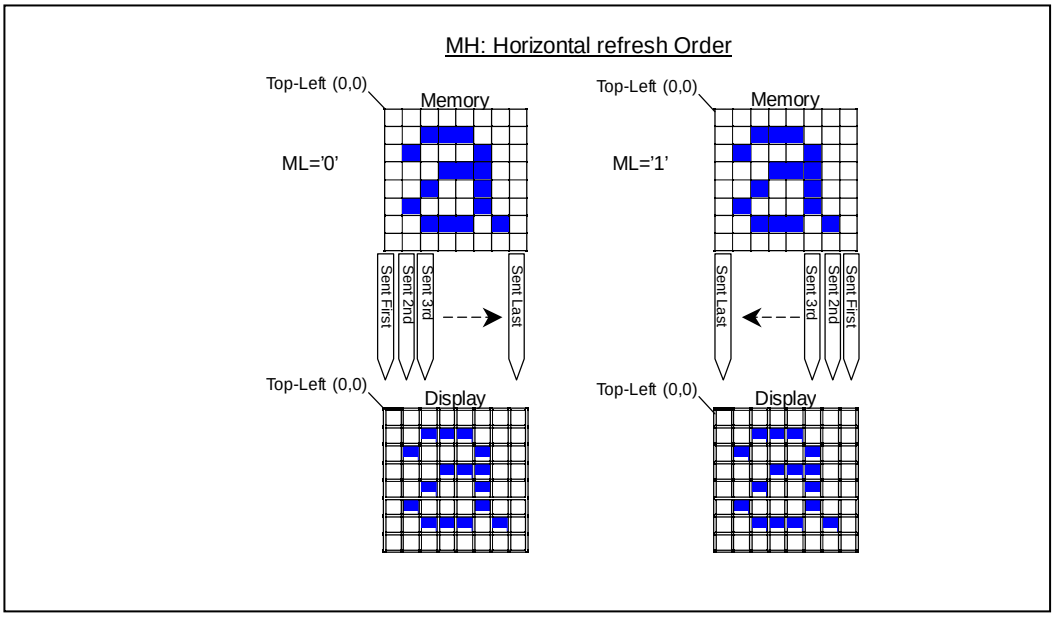

Default

Status	Default Value
Power On Sequence	MY=0,MX=0,MV=0,ML=0,RGB=0
S/W Reset	No Change
H/W Reset	MY=0,MX=0,MV=0,ML=0,RGB=0

10.1.30 VSCSAD (37h): Vertical Scroll Start Address of RAM

37H	VSCSAD (Vertical Scroll Start Address of RAM)												
Inst / Para	D/CX	WRX	RDX	D17-8	D7	D6	D5	D4	D3	D2	D1	D0	(Code)
VSCSAD	0	↑	1	-	0	0	1	1	0	1	1	1	(37h)
1st Parameter	1	↑	1	-	-	-	-	-	-	-	-	-	
2nd Parameter	1	↑	1		SSA7	SSA6	SSA5	SSA4	SSA3	SSA2	SSA1	SSA0	

Note: "-" Don't care, can be set to VDDI or DGND level

Description

-This command is used together with Vertical Scrolling Definition (33h). These two commands describe the scrolling area and the scrolling mode.
-The Vertical Scrolling Start Address command has one parameter which describes which line in the Frame Memory will be written as the first line after the last line of the Top Fixed Area on the display as illustrated below:
-This command Start the scrolling.
-Exit from V-scrolling mode by commands Partial mode On (12h) or Normal mode On (13h).

When MADCTL ML= '0'

Example:

—When Top Fixed Area=Bottom Fixed Area=00, Vertical Scrolling Area=160 and Vertical Scrolling Pointer SSA= '3'.

(Example)

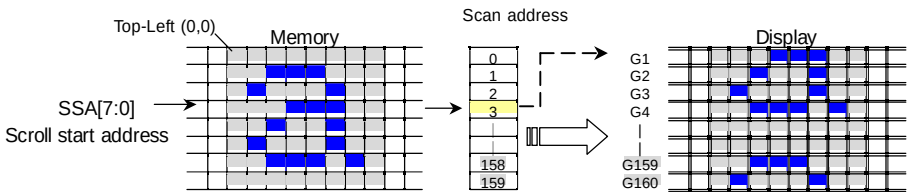

When MADCTL ML = '1'

Example:

—When Top Fixed Area= Bottom Fixed Area=00, Vertical Scrolling Area=160 and SSA= '3'

(Example)

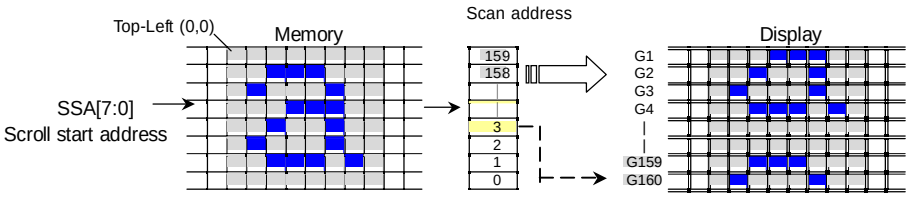

NOTE: -When new Pointer position and Picture Data are sent, the result on the display will happen at the next Panel Scan to avoid tearing effect.
-SSA refers to the Frame Memory scan address.

Register Availability

Status	Availability
Normal Mode On, Idle Mode Off, Sleep Out	Yes
Normal Mode On, Idle Mode On, Sleep Out	Yes
Partial Mode On, Idle Mode Off, Sleep Out	No
Partial Mode On, Idle Mode On, Sleep Out	No
Sleep In	Yes

Default

Status	Default Value
Power On Sequence	0000h
S/W Reset	0000h
H/W Reset	0000h

10.1.31 IDMOFF (38h): Idle Mode Off

38H	IDMOFF (Idle Mode Off)												
Inst / Para	D/CX	WRX	RDX	D17-8	D7	D6	D5	D4	D3	D2	D1	D0	(Code)
IDMOFF	0	↑	1	-	0	0	1	1	1	0	0	0	(38h)
1st Parameter	No Parameter												-

NOTE: "-" Don't care, can be set to VDDI or DGND level

Description	-This command is used to recover from Idle mode on. -In the idle off mode, 1. LCD can display 4096, 65k or 262k colors. 2. Normal frame frequency is applied.
Default	

Status	Default Value
Power On Sequence	Idle Mode Off
S/W Reset	Idle Mode Off
H/W Reset	Idle Mode Off

10.1.32 IDMON (39h): Idle Mode On

39H	IDMON (Idle Mode On)												
Inst / Para	D/CX	WRX	RDX	D17-8	D7	D6	D5	D4	D3	D2	D1	D0	(Code)
IDMOFF	0	↑	1	-	0	0	1	1	1	0	0	1	(39h)
1st Parameter	No Parameter												-

NOTE: "-" Don't care, can be set to VDDI or DGND level

Description

-This command is used to enter into Idle mode on.
-There will be no abnormal visible effect on the display mode change transition.
-In the idle on mode,
1. Color expression is reduced. The primary and the secondary colors using MSB of each R,G and B in the Frame Memory, 8 color depth data is displayed.
2. 8-Color mode frame frequency is applied.
3. Exit from IDMON by Idle Mode Off (38h) command

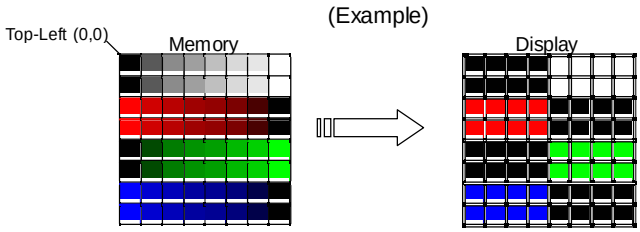

Color	R_5 R_4 R_3 R_2 R_1 R_0	G_5 G_4 G_3 G_2 G_1 G_0	B_5 B_4 B_3 B_4 B_1 B_0
Black	0xxxxx	0xxxxx	0xxxxx
Blue	0xxxxx	0xxxxx	1xxxxx
Red	1xxxxx	0xxxxx	0xxxxx
Magenta	1xxxxx	0xxxxx	1xxxxx
Green	0xxxxx	1xxxxx	0xxxxx
Cyan	0xxxxx	1xxxxx	1xxxxx
Yellow	1xxxxx	1xxxxx	0xxxxx
White	1xxxxx	1xxxxx	1xxxxx

Register Availability

Status	Availability
Normal Mode On, Idle Mode Off, Sleep Out	Yes
Normal Mode On, Idle Mode On, Sleep Out	Yes
Partial Mode On, Idle Mode Off, Sleep Out	No
Partial Mode On, Idle Mode On, Sleep Out	No
Sleep In	Yes

Default

Status	Default Value
Power On Sequence	Idle Mode Off
S/W Reset	Idle Mode Off
H/W Reset	Idle Mode Off

10.1.33 COLMOD (3Ah): Interface Pixel Format

3AH	COLMOD (3Ah): Interface Pixel Format												
Inst / Para	D/CX	WRX	RDX	D17-8	D7	D6	D5	D4	D3	D2	D1	D0	(Code)
COLMOD	0	↑	1	-	0	0	1	1	1	0	1	0	(3Ah)
1st Parameter	1	↑	1	-	VIPF3	VIPF2	VIPF1	VIPF0	-	IFPF2	IFPF1	IFPF0	

NOTE: "-" Don't care, can be set to VDDI or DGND level

Description

This command is used to define the format of RGB picture data, which is to be transferred via the MCU interface and RGB interface. The formats are shown in the table:

IFPF[2:0]		MCU Interface Color Format
011	3	12-bit/pixel
101	5	16-bit/pixel
110	6	18-bit/pixel
111	7	No used

Others are no define and invalid

VIFPF[2:0]		RGB Interface Color Format
0101	5	16-bit/pixel (1-times data transfer)
0110	6	18-bit/pixel (1-times data transfer)
0111	7	No used
1110	14	18-bit/pixel (3-times data transfer)

Others are no define and invalid

Note1: In 12-bit/Pixel, 16-bit/Pixel or 18-bit/Pixel mode, the LUT is applied to transfer data into the Frame Memory.

Note2: When RGB I/F the 12-bit/pixel don't care

Note3: When VIPF[3:0]="1110",6-bit data width of 3-times transfer is used to transmit 1 pixel data with the 18-bit color depth information.

Note4: The Command 3Ah should be set at 55h when writing 16-bit/pixel data into frame memory, but 3Ah should be re-set to 66h when reading pixel data from frame memory. Please check the LUT in chapter 9.19 when using memory read function.

Register Availability

Status	Availability
Normal Mode On, Idle Mode Off, Sleep Out	Yes
Normal Mode On, Idle Mode On, Sleep Out	Yes
Partial Mode On, Idle Mode Off, Sleep Out	No
Partial Mode On, Idle Mode On, Sleep Out	No
Sleep In	Yes

Default

Status	Default Value	
	IFPF[2:0]	VIPF[3:0]
Power On Sequence	0110(18-bit/Pixel)	0110(18-bit/Pixel)
S/W Reset	No Change	No Change
H/W Reset	0110(18-bit/Pixel)	0110(18-bit/Pixel)

10.1.34 RDID1 (DAh): Read ID1 Value

DAH	RDID1 (Read ID1 Value)												
Inst / Para	D/CX	WRX	RDX	D17-8	D7	D6	D5	D4	D3	D2	D1	D0	(Code)
RDID1	0	↑	1	-	1	1	0	1	1	0	1	0	(DAh)
1st Parameter	1	1	↑	-	-	-	-	-	-	-	-	-	-
2nd Parameter	1	1	↑	-	ID17	ID16	ID15	ID14	ID13	ID12	ID11	ID10	

NOTE: "-" Don't care, can be set to VDDI or DGND level

Description

-This read byte returns 8-bit LCD module's manufacturer ID
-The 1st parameter is dummy data
-The 2nd parameter (ID17 to ID10): LCD module's manufacturer ID.
NOTE: See command RDDID (04h), 2nd parameter.

Register Availability

Status	Availability
Normal Mode On, Idle Mode Off, Sleep Out	Yes
Normal Mode On, Idle Mode On, Sleep Out	Yes
Partial Mode On, Idle Mode Off, Sleep Out	No
Partial Mode On, Idle Mode On, Sleep Out	No
Sleep In	Yes

Default

Status	Default Value
Power On Sequence	-
S/W Reset	-
H/W Reset	-

10.1.35 RDID2 (DBh): Read ID2 Value

DBH	RDID2 (Read ID2 Value)												
Inst / Para	D/CX	WRX	RDX	D17-8	D7	D6	D5	D4	D3	D2	D1	D0	(Code)
RDID2	0	↑	1	-	1	1	0	1	1	0	1	1	(DBh)
1st Parameter	1	1	↑	-	-	-	-	-	-	-	-	-	-
2nd Parameter	1	1	↑	-	1	ID26	ID25	ID24	ID23	ID22	ID21	ID20	

NOTE: "-" Don't care, can be set to VDDI or DGND level

Description

-This read byte returns 8-bit LCD module/driver version ID
-The 1st parameter is dummy data
-The 2nd parameter (ID26 to ID20): LCD module/driver version ID
-Parameter Range: ID=80h to FFh

ID26 to ID20	Version	Changes
80h		
81h		
82h		
83h		

NOTE: See command RDDID (04h), 3rd parameter.

Register Availability

Status	Availability
Normal Mode On, Idle Mode Off, Sleep Out	Yes
Normal Mode On, Idle Mode On, Sleep Out	Yes
Partial Mode On, Idle Mode Off, Sleep Out	No
Partial Mode On, Idle Mode On, Sleep Out	No
Sleep In	Yes

Default

Status	Default Value
Power On Sequence	80h
S/W Reset	80h
H/W Reset	80h

10.1.36 RDID3 (DCh): Read ID3 Value

DCH	RDID3 (Read ID2 Value)												
Inst / Para	D/CX	WRX	RDX	D17-8	D7	D6	D5	D4	D3	D2	D1	D0	(Code)
RDID3	0	↑	1	-	1	1	0	1	1	1	0	0	(DCh)
1st Parameter	1	1	↑	-	-	-	-	-	-	-	-	-	-
2nd Parameter	1	1	↑	-	ID37	ID36	ID35	ID34	ID33	ID32	ID31	ID30	

NOTE: "-" Don't care, can be set to VDDI or DGND level

Description

-This read byte returns 8-bit LCD module/driver ID.
-The 1st parameter is dummy data
-The 2nd parameter (ID37 to ID30): LCD module/driver ID.

NOTE: See command RDDID (04h), 4th parameter.

Register Availability

Status	Availability
Normal Mode On, Idle Mode Off, Sleep Out	Yes
Normal Mode On, Idle Mode On, Sleep Out	Yes
Partial Mode On, Idle Mode Off, Sleep Out	No
Partial Mode On, Idle Mode On, Sleep Out	No
Sleep In	Yes

Default

Status	Default Value
Power On Sequence	00h
S/W Reset	00h
H/W Reset	00h

10.2.1 RGBCTR (B0h): RGB signal control

B0H	RGBCTR (RGB signal control)												
Inst / Para	D/CX	WRX	RDX	D17-8	D7	D6	D5	D4	D3	D2	D1	D0	(Code)
RGBCTR	0	↑	1	-	1	0	1	1	0	0	0	0	(B0h)
1st Parameter	1	↑	1	-	0	0	DISSW	ICM	DP	EP	HSP	VSP	

NOTE: "-" Don't care

Description

-Set the operation status on the RGB interface. The setting becomes effective as soon as the command is received.
-ICM: GRAM Write/Read frequency and data input select on the RGB interface

ICM	Write/ Read frequency and input data select		
	Write cycle	Read cycle	Data input
0	PCLK	PCLK	D[17:0]
1	SCL	Internal oscillator	SDA

Symbol	Name	Clock polarity set for RGB Interface
DP	PCLK polarity set	'1' = data fetched at the falling edge '0' = data fetched at the rising edge
EP	Enable polarity set	'1' = Low enable for RGB interface '0' = High enable for RGB interface
HSP	Hsync polarity set	'1' = High level sync clock '0' = Low level sync clock
VSP	Vsync polarity set	'1' = High level sync clock '0' = Low level sync clock
DISSW	Disable S/W	'1' = Disable S/W control '0' = Enable S/W control

Default

Status	Default Value	
	ICM	DP/EP/HSP/VSP
Power On Sequence	0d	0d/0d/0d/0d
S/W Reset	0d	0d/0d/0d/0d
H/W Reset	0d	0d/0d/0d/0d

10.2.2 FRMCTR1 (B1h): Frame Rate Control (In normal mode/ Full colors)

B1H	FRMCTR1 (Frame Rate Control)												
Inst / Para	D/CX	WRX	RDX	D17-8	D7	D6	D5	D4	D3	D2	D1	D0	(Code)
FRMCTR1	0	↑	1	-	1	0	1	1	0	0	0	1	(B1h)
1st Parameter	1	↑	1	-					RTNA3	RTNA2	RTNA1	RTNA0	-
2nd Parameter	1	↑	1	-					FPA3	FPA2	FPA1	FPA0	-
3rd Parameter	1	↑	1	-					BPA3	BPA2	BPA1	BPA0	-

NOTE: "-" Don't care

Description	-Set the frame frequency of the full colors normal mode. - Frame rate=fosc/((RTNA + 18) x (LINE + FPA + BPA)) - 1 < FPA(front porch) + BPA(back porch)<=22
Default	Status: Default Value Power On Sequence: 06h/03h/02h S/W Reset: 06h/03h/02h H/W Reset: 06h/03h/02h

10.2.3 FRMCTR2 (B2h): Frame Rate Control (In Idle mode/ 8-colors)

B2H	FRMCTR2 (Frame Rate Control)												
Inst / Para	D/CX	WRX	RDX	D17-8	D7	D6	D5	D4	D3	D2	D1	D0	(Code)
FRMCTR2	0	↑	1	-	1	0	1	1	0	0	1	0	(B2h)
1st Parameter	1	↑	1	-					RTNB3	RTNB2	RTNB1	RTNB0	-
2nd Parameter	1	↑	1	-					FPB3	FPB2	FPB1	FPB0	-
3rd Parameter	1	↑	1	-					BPB3	BPB2	BPB1	BPB0	-

NOTE: "-" Don't care

Description	-Set the frame frequency of the Idle mode. - Frame rate=fosc/((RTNB + 18) x (LINE + FPB + BPB)) - 1 < FPB(front porch) + BPB(back porch)<=22
Default	Status: Default Value Power On Sequence: 06h/03h/02h S/W Reset: 06h/03h/02h H/W Reset: 06h/03h/02h

10.2.4 FRMCTR3 (B3h): Frame Rate Control (In Partial mode/ full colors)

B3H	FRMCTR3 (Frame Rate Control)												
Inst / Para	D/CX	WRX	RDX	D17-8	D7	D6	D5	D4	D3	D2	D1	D0	(Code)
FRMCTR3	0	↑	1	-	1	0	1	1	0	0	1	1	(B3h)
1st Parameter	1	↑	1	-					RTNC3	RTNC2	RTNC1	RTNC0	-
2nd Parameter	1	↑	1	-					FPC3	FPC2	FPC1	FPC0	-
3rd Parameter	1	↑	1	-					BPC3	BPC2	BPC1	BPC0	-
4th Parameter	1	↑	1	-					RTND3	RTND2	RTND1	RTND0	
5th Parameter	1	↑	1	-					FPD3	FPD2	FPD1	FPD0	
6th Parameter	1	↑	1	-					BPD3	BPD2	BPD1	BPD0	-

NOTE: "-" Don't care

Description	-Set the frame frequency of the Partial mode/ full colors. - 1st parameter to 3rd parameter are used in line inversion mode. - 4th parameter to 6th parameter are used in frame inversion mode. - Frame rate=fosc/((RTNC + 18) x (LINE + FPC + BPC)) - 1 < FPC(front porch) + BPC(back porch)<=22

Default	Status	Default Value
	Power On Sequence	06h/03h/02h
	S/W Reset	06h/03h/02h
	H/W Reset	06h/03h/02h

10.2.5 INVCTR (B4h): Display Inversion Control

B4H	INVCTR (Display Inversion Control)												
Inst / Para	D/CX	WRX	RDX	D17-8	D7	D6	D5	D4	D3	D2	D1	D0	(Code)
INVCTR	0	↑	1	-	1	0	1	1	0	1	0	0	(B4h)
1st Parameter	1	↑	1	-	0	0	0	0	0	NLA	NLB	NLC	02h

NOTE: "-" Don't care

Description

-Display Inversion mode control

-NLA: Inversion setting in full colors normal mode (Normal mode on)

NLA	Inversion setting in full Colors normal mode
0	**Line Inversion**
1	Frame Inversion

-NLB: Inversion setting in Idle mode (Idle mode on)

NLB	Inversion setting in Idle mode
0	Line Inversion
1	**Frame Inversion**

-NLC: Inversion setting in full colors partial mode (Partial mode on / Idle mode off)

NLC	Inversion setting in full Colors partial mode
0	**Line Inversion**
1	Frame Inversion

Default

Status	Default Value			
	NLA	NLB	NLC	B4h
Power On Sequence	0d	1d	0d	02h
S/W Reset	0d	1d	0d	02h
H/W Reset	0d	1d	0d	02h

10.2.6 RGBBPCTR (B5h): RGB Interface Blanking Porch setting

B5H	RGBPSET (RGB Interface Blanking Porch setting)												
Inst / Para	D/CX	WRX	RDX	D17-8	D7	D6	D5	D4	D3	D2	D1	D0	(Code)
RGBBPCTR	0	↑	1	-	1	0	1	1	0	1	0	1	(B5h)
1st Parameter	1	↑	1	-	-	-	-	-	-	-	-	-	-
2nd Parameter	1	↑	1	-	VBP7	VBP6	VBP5	VBP4	VBP3	VBP2	VBP1	VBP0	-
3rd Parameter	1	↑	1	-	-	-	-	-	-	-	-	HBP8	-
4th Parameter	1	↑	1	-	HBP7	HBP6	HBP5	HBP4	HBP3	HBP2	HBP1	HBP0	-

NOTE: "-" Don't care

Description

-Set the blanking porch in the RGB interface
-VBP：Vertical back porch
-HBP：Horizontal back porch

10.2.7 DISSET5 (B6h): Display Function set 5

B6H	DISSET (Display Function set 5)												
Inst / Para	D/CX	WRX	RDX	D17-8	D7	D6	D5	D4	D3	D2	D1	D0	(Code)
DISSET5	0	↑	1	-	1	0	1	1	0	1	1	0	(B6h)
1st Parameter	1	↑	1	-	0	0	NO1	NO0	SDT1	SDT0	EQ1	EQ0	16h
2nd Parameter	1	↑	1	-	0	0	0	0	PTG1	PTG0	PT1	PT0	02h

NOTE: "-" Don't care

Description

-1st parameter: Set output waveform relation.

-NO[1:0]: Set the amount of non-overlap of the gate output

NO[1:0]		Amount of non-overlap of the gate output	
		Refer the Internal oscillator	Refer the PCLK
00	0	1 clock cycle	4 clock cycle
01	1	4 clock cycle	16 clock cycle
10	2	6 clock cycle	24 clock cycle
11	3	8 clock cycle	32 clock cycle

-SDT[1:0]: Set delay amount from gate signal falling edge of the source output.

SDT[1:0]		Amount of non-overlap of the gate output	
		Refer the Internal oscillator	Refer the PCLK
00	0	1 clock cycle	4 clock cycle
01	1	4 clock cycle	16 clock cycle
10	2	6 clock cycle	24 clock cycle
11	3	8 clock cycle	32 clock cycle

-EQ[1:0]: Set the Equalizing period

EQ[1:0]		Amount of non-overlap of the gate output	
		Refer the Internal oscillator	Refer the PCLK
00	0	No EQ	No EQ
01	1	2 clock cycle	4 clock cycle
10	2	4 clock cycle	16 clock cycle
11	3	6 clock cycle	24 clock cycle

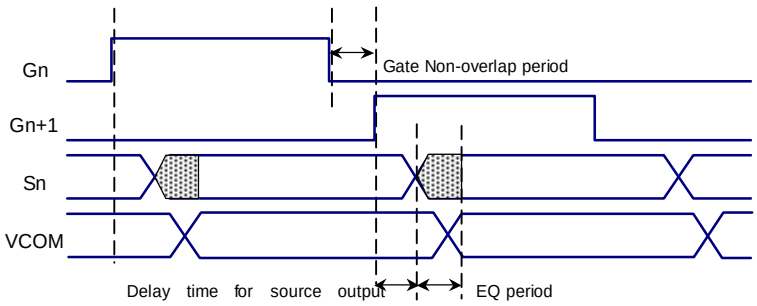

-2nd parameter: Set the output waveform in non-display area.

-PTG[1:0]: Determine gate output in a non-display area in the partial mode

PTG[1:0]		Gate output in a non-display area
00	0	Normal scan
01	1	Fix on VGL
10	2	Fix on VGL
11	3	Fix on VGL

-PT[1:0]: Determine Source /VCOM output in a non-display area in the partial mode

PT[1:0]		Source output on non-display area		VCOM output on non-display area	
		Positive	Negative	Positive	Negative
00	0	V63	V0	VCOML	VCOMH
01	1	V0	V63	VCOML	VCOMH
10	2	AGND	AGND	AGND	AGND
11	3	Hi-z	Hi-z	AGND	AGND

10.2.8 PWCTR1 (C0h): Power Control 1

C0H	PWCTR1 (Power Control 1)												
Inst / Para	D/CX	WRX	RDX	D17-8	D7	D6	D5	D4	D3	D2	D1	D0	(Code)
PWCTR1	0	↑	1	-	1	1	0	0	0	0	0	0	(C0h)
1st Parameter	1	↑	1	-	0	0	0	VRH4	VRH3	VRH2	VRH1	VRH0	
2nd Parameter	1	↑	1	-	0	0	0	0	0	VC2	VC1	VC0	

NOTE: "-" Don't care

Description

-Set the GVDD and VCI1 voltage

VRH[4:0]		GVDD
00000	0	5.00
00001	1	4.75
00010	2	4.70
00011	3	4.65
00100	4	4.60
00101	5	4.55
00110	6	4.50
00111	7	4.45
01000	8	4.40
01001	9	4.35
01010	10	4.30
01011	11	4.25
01100	12	4.20
01101	13	4.15
01110	14	4.10
01111	15	4.05
10000	16	4.00
10001	17	3.95
10010	18	3.90
10011	19	3.85
10100	20	3.80
10101	21	3.75
10110	22	3.70
10111	23	3.65
11000	24	3.60
11001	25	3.55
11010	26	3.50
11011	27	3.45
11100	28	3.40
11101	29	3.35
11110	30	3.25
11111	31	3.00

VC[2:0]		VCI1
000	0	2.75
001	1	2.70
010	2	2.65
011	3	2.60
100	4	2.55
101	5	**2.50**

10.2.9 PWCTR2 (C1h): Power Control 2

C1H	PWCTR2 (Power Control 2)												
Inst / Para	D/CX	WRX	RDX	D17-8	D7	D6	D5	D4	D3	D2	D1	D0	(Code)
PWCTR2	0	↑	1	-	1	1	0	0	0	0	0	1	(C1h)
1st Parameter	1	↑	1		0	0	0	0	0	BT2	BT1	BT0	

NOTE: "-" Don't care

Description

-Set the AVDD, VCL, VGH and VGL supply power level

BT[2:0]		AVDD		VCL		VGHH		VGLL	
000	0	2xVDD	5.49	-1xVDD	-2.74	4*VCI1	9.80	-3* VCI1	-7.35
001	1	2xVDD	5.49	-1xVDD	-2.74	4* VCI1	9.80	-4* VCI1	-9.80
010	2	2xVDD	5.49	-1xVDD	-2.74	5* VCI1	12.25	-3* VCI1	-7.35
011	3	2xVDD	5.49	-1xVDD	-2.74	5* VCI1	12.25	-4* VCI1	-9.80
100	4	2xVDD	5.49	-1xVDD	-2.74	5* VCI1	12.25	-5* VCI1	-12.25
101	5	2xVDD	5.49	-1xVDD	-2.74	6* VCI1	14.70	-3* VCI1	-7.35
110	6	2xVDD	5.49	-1xVDD	-2.74	6* VCI1	14.70	-4* VCI1	-9.80
111	7	2xVDD	5.49	-1xVDD	-2.74	6* VCI1	14.70	-5* VCI1	-12.25

Note: When VCI1=2.5V, VDD=2.8V,Set-up cycle 1 effective=98%, Set-up cycle 2 effective=98%,

10.2.10 PWCTR3 (C2h): Power Control 3 (in Normal mode/ Full colors)

C2H	PWCTR3 (Power Control 3)												
Inst / Para	D/CX	WRX	RDX	D17-8	D7	D6	D5	D4	D3	D2	D1	D0	(Code)
PWCTR3	0	↑	1	-	1	1	0	0	0	0	1	0	(C2h)
1st Parameter	1	↑	1	-	0	0	0	0	0	APA2	APA1	APA0	
2nd Parameter	1	↑	1	-	0	0	0	0	0	DCA2	DCA1	DCA0	

NOTE: "-" Don't care

Description

-Set the amount of current in Operational amplifier in normal mode/full colors.
-Adjust the amount of fixed current from the fixed current source in the operational amplifier for the source driver.

AP[2:0]		Amount of Current in Operational Amplifier
000	0	Operation of the operational amplifier stops
001	1	Small
010	2	Medium Low
011	3	Medium
100	4	Medium High
101	5	Large
110	6	Reserved
111	7	Reserved

-Set the Booster circuit Step-up cycle in Normal mode/ full colors.

DC[2:0]		Step-up cycle in Booster circuit 1	Step-up cycle in Booster circuit 2,3
000	0	BCLK / 1	BCLK / 1
001	1	**BCLK / 1**	**BCLK / 2**
010	2	BCLK / 1	BCLK / 4
011	3	BCLK / 2	BCLK / 2
100	4	BCLK / 2	BCLK / 4
101	5	BCLK / 4	BCLK / 4
110	6	BCLK / 4	BCLK / 8
111	7	BCLK / 4	BCLK / 16

Note: BCLK is Clock frequency for Booster circuit

10.2.11 PWCTR4 (C3h): Power Control 4 (in Idle mode/ 8-colors)

C3H	PWCTR4 (Power Control 4)												
Inst / Para	D/CX	WRX	RDX	D17-8	D7	D6	D5	D4	D3	D2	D1	D0	(Code)
PWCTR4	0	↑	1	-	1	1	0	0	0	0	1	1	(C3h)
1st Parameter	1	↑	1	-	0	0	0	0	0	APB2	APB1	APB0	
2nd Parameter	1	↑	1	-	0	0	0	0	0	DCB2	DCB1	DCB0	

NOTE: "-" Don't care

Description

-Set the amount of current in Operational amplifier in Idle mode/8 colors.
-Adjust the amount of fixed current from the fixed current source in the operational amplifier for the source driver.

AP[2:0]		Amount of Current in Operational Amplifier
000	0	Operation of the operational amplifier stops
001	1	Small
010	2	**Medium Low**
011	3	Medium
100	4	Medium High
101	5	Large
110	6	Reserved
111	7	Reserved

-Set the Booster circuit Step-up cycle in Idle mode/8 colors.

DC[2:0]		Step-up cycle in Booster circuit 1	Step-up cycle in Booster circuit 2,3
000	0	BCLK / 1	BCLK / 1
001	1	BCLK / 1	BCLK / 2
010	2	BCLK / 1	BCLK / 4
011	3	BCLK / 2	BCLK / 2
100	4	**BCLK / 2**	**BCLK / 4**
101	5	BCLK / 4	BCLK / 4
110	6	BCLK / 4	BCLK / 8
111	7	BCLK / 4	BCLK / 16

Note: BCLK is Clock frequency for Booster circuit

10.2.12 PWCTR5 (C4h): Power Control 5 (in Partial mode/ full-colors)

C4H	PWCTR5 (Power Control 5)												
Inst / Para	D/CX	WRX	RDX	D17-8	D7	D6	D5	D4	D3	D2	D1	D0	(Code)
PWCTR5	0	↑	1	-	1	1	0	0	0	1	0	0	(C4h)
1st Parameter	1	↑	1	-	0	0	0	0	0	APC2	APC1	APC0	
2nd Parameter	1	↑	1	-	0	0	0	0	0	DCC2	DCC1	DCC0	

NOTE: "-" Don't care

Description

-Set the amount of current in Operational amplifier in Partial mode/ full-colors.
-Adjust the amount of fixed current from the fixed current source in the operational amplifier for the source driver.

AP[2:0]		Amount of Current in Operational Amplifier
000	0	Operation of the operational amplifier stops
001	1	Small
010	2	**Medium Low**
011	3	Medium
100	4	Medium High
101	5	Large
110	6	Reserved
111	7	Reserved

-Set the Booster circuit Step-up cycle in Partial mode/ full-colors.

DC[2:0]		Step-up cycle in Booster circuit 1	Step-up cycle in Booster circuit 2,3
000	0	BCLK / 1	BCLK / 1
001	1	BCLK / 1	BCLK / 2
010	2	**BCLK / 1**	**BCLK / 4**
011	3	BCLK / 2	BCLK / 2
100	4	BCLK / 2	BCLK / 4
101	5	BCLK / 4	BCLK / 4
110	6	BCLK / 4	BCLK / 8
111	7	BCLK / 4	BCLK / 16

Note: BCLK is Clock frequency for Booster circuit

10.2.13 VMCTR1 (C5h): VCOM Control 1

C5H	VMCTR1 (VCOM Control 1)												
Inst / Para	D/CX	WRX	RDX	D17-8	D7	D6	D5	D4	D3	D2	D1	D0	(Code)
VMCTR1	0	↑	1	-	1	1	0	0	0	1	0	1	(C5h)
1st Parameter	1	↑	1	-	-	VMH6	VMH5	VMH 4	VMH 3	VMH 2	VMH 1	VMH 0	
2nd Parameter	1	↑	1	-	-	VML6	VML5	VML4	VML3	VML2	VML1	VML0	

NOTE: "-" Don't care

Description

-Set VCOMH Voltage

VMH[6:0]		VCOMH	VMH[6:0]		VCOMH	VMH[6:0]		VCOMH	VMH[6:0]		VCOMH
0000000	0	2.500	0011011	27	3.175	0110110	54	3.850	1010001	81	4.525
0000001	1	2.525	0011100	28	3.200	0110111	55	3.875	1010010	82	4.550
0000010	2	2.550	0011101	29	3.225	0111000	56	3.900	1010011	83	4.575
0000011	3	2.575	0011110	30	3.250	0111001	57	3.925	1010100	84	4.600
0000100	4	2.600	0011111	31	3.275	0111010	58	3.950	1010101	85	4.625
0000101	5	2.625	0100000	32	3.300	0111011	59	3.975	1010110	86	4.650
0000110	6	2.650	0100001	33	3.325	0111100	60	4.000	1010111	87	4.675
0000111	7	2.675	0100010	34	3.350	0111101	61	4.025	1011000	88	4.700
0001000	8	2.700	0100011	35	3.375	0111110	62	4.050	1011001	89	4.725
0001001	9	2.725	0100100	36	3.400	0111111	63	4.075	1011010	90	4.750
0001010	10	2.750	0100101	37	3.425	1000000	64	4.100	1011011	91	4.775
0001011	11	2.775	0100110	38	3.450	1000001	65	4.125	1011100	92	4.800
0001100	12	2.800	0100111	39	3.475	1000010	66	4.150	1011101	93	4.825
0001101	13	2.825	0101000	40	3.500	1000011	67	4.175	1011110	94	4.850
0001110	14	2.850	0101001	41	3.525	1000100	68	4.200	1011111	95	4.875
0001111	15	2.875	0101010	42	3.550	1000101	69	4.225	1100000	96	4.900
0010000	16	2.900	0101011	43	3.575	1000110	70	4.250	1100001	97	4.925
0010001	17	2.925	0101100	44	3.600	1000111	71	4.275	1100010	98	4.950
0010010	18	2.950	0101101	45	3.625	1001000	72	4.300	1100011	99	4.975
0010011	19	2.975	0101110	46	3.650	1001001	73	4.325	1100100	100	5.000
0010100	20	3.000	0101111	47	3.675	1001010	74	4.350	1100101	101	Not Permitted
0010101	21	3.025	0110000	48	3.700	1001011	75	4.375		|	
0010110	22	3.050	0110001	49	3.725	1001100	76	4.400	1111111	127	
0010111	23	3.075	0110010	50	3.750	1001101	77	4.425			
0011000	24	3.100	0110011	51	3.775	1001110	78	4.450			
0011001	25	3.125	0110100	52	3.800	1001111	79	4.475			
0011010	26	3.150	0110101	53	3.825	1010000	80	4.500			

-Set VCOML Voltage

VML[6:0]		VCOML	VML[6:0]		VCOML	VML[6:0]		VCOML	VML[6:0]		VCOML
0000000	0	-2.500	0011011	27	-1.825	0110110	54	-1.150	1010001	81	-0.475
0000001	1	-2.475	0011100	28	-1.800	0110111	55	-1.125	1010010	82	-0.450
0000010	2	-2.450	0011101	29	-1.775	0111000	56	-1.100	1010011	83	-0.425
0000011	3	-2.425	0011110	30	-1.750	0111001	57	-1.075	1010100	84	-0.400
0000100	4	-2.400	0011111	31	-1.725	0111010	58	-1.050	1010101	85	-0.375
0000101	5	-2.375	0100000	32	-1.700	0111011	59	-1.025	1010110	86	-0.350
0000110	6	-2.350	0100001	33	-1.675	0111100	60	-1.000	1010111	87	-0.325
0000111	7	-2.325	0100010	34	-1.650	0111101	61	-0.975	1011000	88	-0.300
0001000	8	-2.300	0100011	35	-1.625	0111110	62	-0.950	1011001	89	-0.275
0001001	9	-2.275	0100100	36	-1.600	0111111	63	-0.925	1011010	90	-0.250
0001010	10	-2.250	0100101	37	-1.575	1000000	64	-0.900	1011011	91	-0.225
0001011	11	-2.225	0100110	38	-1.550	1000001	65	-0.875	1011100	92	-0.200
0001100	12	-2.200	0100111	39	-1.525	1000010	66	-0.850	1011101	93	-0.175
0001101	13	-2.175	0101000	40	-1.500	1000011	67	-0.825	1011110	94	-0.150
0001110	14	-2.150	0101001	41	-1.475	1000100	68	-0.800	1011111	95	-0.125
0001111	15	-2.125	0101010	42	-1.450	1000101	69	-0.775	1100000	96	-0.100
0010000	16	-2.100	0101011	43	-1.425	1000110	70	-0.750	1100001	97	-0.075
0010001	17	-2.075	0101100	44	-1.400	1000111	71	-0.725	1100010	98	-0.050
0010010	18	-2.050	0101101	45	-1.375	1001000	72	-0.700	1100011	99	-0.025
0010011	19	-2.025	0101110	46	-1.350	1001001	73	-0.675	1100100	100	0.000
0010100	20	-2.000	0101111	47	-1.325	1001010	74	-0.650	1100101	101	Not Permitted
0010101	21	-1.975	0110000	48	-1.300	1001011	75	-0.625		|	
0010110	22	-1.950	0110001	49	-1.275	1001100	76	-0.600	1111111	127	
0010111	23	-1.925	0110010	50	-1.250	1001101	77	-0.575			
0011000	24	-1.900	0110011	51	-1.225	1001110	78	-0.550			
0011001	25	-1.875	0110100	52	-1.200	1001111	79	-0.525			
0011010	26	-1.850	0110101	53	-1.175	1010000	80	-0.500			

10.2.14 VMOFCTR (C7h): VCOM Offset Control

C7H	VMOFCTR (VCOM Offset Control)												
Inst / Para	D/CX	WRX	RDX	D17-8	D7	D6	D5	D4	D3	D2	D1	D0	(Code)
VMOFCTR	0	↑	1	-	1	1	0	0	0	1	1	1	(C7h)
1st Parameter	1	↑	1	-	-	VMF6	-	-	VMF3	VMF2	VMF1	VMF0	

NOTE: "-" Don't care, can be set to VDDI or DGND level

Description

-Set VCOM Voltage level for reduce the flicker issue

VMF[6]	VMF[3:0]	VCOMH Output Level	VCOML Output Level
0	0000	"VMH"-16d	"VML"-16d
0	0001	"VMH"-15d	"VML"-15d
0	0010	"VMH"-14d	"VML"-14d
0		|	|
0	1110	"VMH"-2d	"VML"-2d
0	1111	"VMH"-1d	"VML"-1d
1	0000	"VMH"	"VML"
1	0001	"VMH"+1d	"VML"+1d
1	0010	"VMH"+2d	"VML"+2d
1		|	|
1	1110	"VMH"+14d	"VML"+14d
1	1111	"VMH"+15d	"VML"+15d

- 1d=25mV, 2d=50mV 3d=75mv....
- 2.5V <= VMH ± nd <= 5.0V; -2. 5V <= VML ± nd<= 0V (n=0~15,16)
- VMF[6] & VMF[3:0] are stored in NV memory to contrast.

10.2.15 WRID2 (D1h): Write ID2 Value

D1H	WRID2 (Write ID2 Value)												
Inst / Para	D/CX	WRX	RDX	D17-8	D7	D6	D5	D4	D3	D2	D1	D0	(Code)
WRID2	0	↑	1	-	1	1	0	1	0	0	0	1	(D1h)
1st Parameter	1	↑	1	-	-	ID26	ID25	ID24	ID23	ID22	ID21	ID20	-

NOTE: "-" Don't care

Description	-Write 7-bit data of LCD module version to save it to NV memory. -The parameter ID2[6:0] is LCD Module version ID.
	Refer to Applcation Note

10.2.16 WRID3 (D2h): Write ID3 Value

D2H	WRID3 (Write ID3 Value)												
Inst / Para	D/CX	WRX	RDX	D17-8	D7	D6	D5	D4	D3	D2	D1	D0	(Code)
WRID3	0	↑	1	-	1	1	0	1	0	0	1	0	(D2h)
1st Parameter	1	↑	1	-	ID37	ID36	ID35	ID34	ID33	ID32	ID31	ID30	-

NOTE: "-" Don't care

Description	-Write 8-bit data of project code module to save it to NV memory. -The parameter ID3[7:0] is product project ID.
	Refer to Applcation Note

10.2.17 RDID4 (D3h): Read the ID4 value

D3H	RDID4 (Read the ID4 value)												
Inst / Para	D/CX	WRX	RDX	D17-8	D7	D6	D5	D4	D3	D2	D1	D0	(Code)
RDID4	0	↑	1	-	1	1	0	1	0	0	1	1	(D3h)
1st Parameter	1	1	↑	-	-	-	-	-	-	-	-	-	
2nd Parameter	1	1	↑	-	ID417	ID416	ID415	ID414	ID413	ID412	ID411	ID410	-
3rd Parameter	1	1	↑	-	ID427	ID426	ID425	ID424	ID423	ID422	ID421	ID420	-
4th Parameter	1	1	↑	-	ID437	ID436	ID435	ID434	ID433	ID432	ID431	ID430	-
5th Parameter	1	1	↑	-	ID447	ID446	ID445	ID444	ID443	ID442	ID441	ID440	-

NOTE: "-" Don't care

Description	-Read the Driver IC information from mask value. -The 1st parameter is dummy data. -The 2nd parameter ID41[7:0]="03h" is Driver IC ID code. -The 3rd parameter ID42[7:0] is Driver IC Part number ID. (The code be define by Driver IC Vender) -The 4th & 5th parameter ID43[7:0] & ID44[7:0] are Driver IC version ID.
Default	

Status	Default Value			
	ID41[7:0]	ID42[7:0]	ID43[7:0]	ID44[7:0]
Power On Sequence	03h	20h	01h	00h
S/W Reset	03h	20h	01h	00h
H/W Reset	03h	20h	01h	00h

10.2.18 NVFCTR1 (D9h): NV Memory Function Controller 1

D9H	NVFCTR1 (NV Memory Function Controller 1)												
Inst / Para	D/CX	WRX	RDX	D17-8	D7	D6	D5	D4	D3	D2	D1	D0	(Code)
NVFCTR1	0	↑	1	-	1	1	0	1	1	0	0	1	(D9h)
1st Parameter	1	1	↑	-	-	-	-	EXTC	-	-	-	RDY	-

NOTE: "-" Don't care

Description	OTP Controller flag
	Refer to Applcation Note

10.2.19 NVFCTR2 (DEh): NV Memory Function Controller 2

DEH	NVFCTR1 (NV Memory Function Controller 2)												
Inst / Para	D/CX	WRX	RDX	D17-8	D7	D6	D5	D4	D3	D2	D1	D0	(Code)
NVFCTR1	0	↑	1	-	1	1	0	1	1	1	1	0	(DEh)
1st Parameter	1	↑	1		1	0	1	0	1	0	1	0	AA
2nd Parameter	1	↑	1		0	0	0	0	1	1	1	1	0F
3rd Parameter	1	↑	1		1	0	1	0	0	1	0	1	A5

NOTE: "-" Don't care

Description	OTP Read Command
	Refer to Applcation Note

10.2.20 NVFCTR3 (DFh): NV Memory Function Controller 3

DFH	NVFCTR1 (NV Memory Function Controller 3												
Inst / Para	D/CX	WRX	RDX	D17-8	D7	D6	D5	D4	D3	D2	D1	D0	(Code)
NVFCTR1	0	↑	1	-	1	1	0	1	1	1	1	1	(DFh)
1st Parameter	1	↑	1		0	1	0	1	0	1	0	1	55
2ndParameter	1	↑	1		1	1	1	1	0	0	0	0	F0
3rd Parameter	1	↑	1		0	1	0	1	1	0	1	0	5A

NOTE: "-" Don't care

Description	OTP Write Command
	Refer to Applcation Note

10.2.21 GMCTRP1 (E0h): Gamma ('+'polarity) Correction Characteristics Setting

E0H	GMCTRP0 (Gamma '+'polarity Correction Characteristics Setting)												
Inst / Para	D/CX	WRX	RDX	D17-8	D7	D6	D5	D4	D3	D2	D1	D0	(Code)
GMCTRP1	0	↑	1	-	1	1	1	0	0	0	0	0	(E0h)
1st Parameter	1	↑	1	-	-	-	-	-	RFP3	RFP2	RFP1	RFP0	
2nd Parameter	1	↑	1	-	-	-	-	PKP04	PKP03	PKP02	PKP01	PKP00	
3rd Parameter	1	↑	1	-	-	-	-	PKP14	PKP13	PKP12	PKP11	PKP10	
4th Parameter	1	↑	1	-	-	-	-	PKP24	PKP23	PKP22	PKP21	PKP20	
5thParameter	1	↑	1	-	-	-	-	PKP34	PKP33	PKP32	PKP31	PKP30	
6th Parameter	1	↑	1	-	-	-	-	PKP44	PKP43	PKP42	PKP41	PKP40	
7th Parameter	1	↑	1	-	-	-	-	-	PKP53	PKP52	PKP51	PKP50	
8th Parameter	1	↑	1	-	-	-	-	-	PKP63	PKP62	PKP61	PKP60	
9th Parameter	1	↑	1	-	-	-	-	-	PKP73	PKP72	PKP71	PKP70	
10th Parameter	1	↑	1	-	-	-	-	-	PKP83	PKP82	PKP81	PKP80	
11th Parameter	1	↑	1	-	-	-	-	RFP14	RFP13	RFP12	RFP11	RFP10	
12th Parameter	1	↑	1	-	-	-	-	OSP14	OSP13	OSP12	OSP11	OSP10	
13th Parameter	1	↑	1	-	-	-	-	-	OSP3	OSP2	OSP1	OSP0	

NOTE: "-" Don't care

Description

Negative Polarity	Set-up Contents
RFP[3:0]	The voltage of V0 grayscale is selected by the variable resistor
PKP0[4:0]	The voltage of V3 grayscale is selected by the 32 to 1 selector
PKP1[4:0]	The voltage of V6 grayscale is selected by the 32 to 1 selector
PKP2[4:0]	The voltage of V11 grayscale is selected by the 32 to 1 selector
PKP3[4:0]	The voltage of V20 grayscale is selected by the 32 to 1 selector
PKP4[4:0]	The voltage of V31 grayscale is selected by the 32 to 1 selector
PKP5[3:0]	The voltage of V43 grayscale is selected by the 16 to 1 selector
PKP6[3:0]	The voltage of V52 grayscale is selected by the 16 to 1 selector
PKP7[3:0]	The voltage of V57 grayscale is selected by the 16 to 1 selector
PKP8[3:0]	The voltage of V60 grayscale is selected by the 16 to 1 selector
RFP1[4:0]	The voltage of V1 grayscale is selected by the variable resistor
OSP1[4:0]	The voltage of V62 grayscale is selected by the variable resistor
OSP[3:0]	The voltage of V63 grayscale is selected by the variable resistor

10.2.22 GMCTRN1 (E1h): Gamma '-'polarity Correction Characteristics Setting

E1H	GMCTRP0 (Gamma '+'polarity Correction Characteristics Setting)												
Inst / Para	D/CX	WRX	RDX	D17-8	D7	D6	D5	D4	D3	D2	D1	D0	(Code)
GMCTRP1	0	↑	1	-	1	1	1	0	0	0	0	1	(E1h)
1st Parameter	1	↑	1	-	-	-	-	-	RFN3	RFN2	RFN1	RFN0	
2nd Parameter	1	↑	1	-	-	-	-	PKN04	PKN03	PKN02	PKN01	PKN00	
3rd Parameter	1	↑	1	-	-	-	-	PKN14	PKN13	PKN12	PKN11	PKN10	
4th Parameter	1	↑	1	-	-	-	-	PKN24	PKN23	PKN22	PKN21	PKN20	
5thParameter	1	↑	1	-	-	-	-	PKN34	PKN33	PKN32	PKN31	PKN30	
6th Parameter	1	↑	1	-	-	-	-	PKN44	PKN43	PKN42	PKN41	PKN40	
7th Parameter	1	↑	1	-	-	-	-	-	PKN53	PKN52	PKN51	PKN50	
8th Parameter	1	↑	1	-	-	-	-	-	PKN63	PKN62	PKN61	PKN60	
9th Parameter	1	↑	1	-	-	-	-	-	PKN73	PKN72	PKN71	PKN70	
10th Parameter	1	↑	1	-	-	-	-	-	PKN83	PKN82	PKN81	PKN80	
11th Parameter	1	↑	1	-	-	-	-	RFN14	RFN13	RFN12	RFN11	RFN10	
12th Parameter	1	↑	1	-	-	-	-	OSN14	OSN13	OSN12	OSN11	OSN10	
13th Parameter	1	↑	1	-	-	-	-	-	OSN3	OSN2	OSN1	OSN0	

NOTE: "-" Don't care

Description

Negative Polarity	Set-up Contents
RFN[3:0]	The voltage of V63 grayscale is selected by the variable resistor
PKN0[4:0]	The voltage of V60 grayscale is selected by the 32 to 1 selector
PKN1[4:0]	The voltage of V57 grayscale is selected by the 32 to 1 selector
PKN2[4:0]	The voltage of V52 grayscale is selected by the 32 to 1 selector
PKN3[4:0]	The voltage of V43 grayscale is selected by the 32 to 1 selector
PKN4[4:0]	The voltage of V31 grayscale is selected by the 32 to 1 selector
PKN5[3:0]	The voltage of V20 grayscale is selected by the 16 to 1 selector
PKN6[3:0]	The voltage of V11 grayscale is selected by the 16 to 1 selector
PKN7[3:0]	The voltage of V6 grayscale is selected by the 16 to 1 selector
PKN8[3:0]	The voltage of V3 grayscale is selected by the 16 to 1 selector
RFN1[4:0]	The voltage of V62 grayscale is selected by the variable resistor
OSN1[4:0]	The voltage of V1 grayscale is selected by the variable resistor
OSN[3:0]	The voltage of V0 grayscale is selected by the variable resistor

10.2.23 AUTOCTRL (F1h): NVM and OSC control function

09H	RDDST (Read Display Status)												
Inst / Para	D/CX	WRX	RDX	D17-8	D7	D6	D5	D4	D3	D2	D1	D0	(Code)
AUTOCTRL	0	↑	1	-	1	1	1	1	0	0	0	1	(F1h)
1st Parameter	1	1	↑	-	OTP PROG	0	0	0	1	0	0	0	-

NOTE: "-" Don't care

Description

Bit	Description	Value
OTP PROG	OTP programming function	'1' = Enable OTP programming function '0' = Disable OTP programming function

Default

Status	Default Value(D7~D0)
Power On Sequence	0000_1000 (08h)
S/W Reset	0000_1000 (08h)
H/W Reset	0000_1000 (08h)

10.2.24 OSCADJ (F2h): Internal OSC frequency control

09H	RDDST (Read Display Status)												
Inst / Para	D/CX	WRX	RDX	D17-8	D7	D6	D5	D4	D3	D2	D1	D0	(Code)
OSCADJ	0	↑	1	-	1	1	1	1	0	0	1	0	(F2h)
1st Parameter	1	1	↑	-	0	0	0	0	0	OSC SEL2	OSC SEL1	OSC SEL0	-

NOTE: "-" Don't care

Description

Bit	Description	Value
OSCSEL	Internal OSC frequency adjust function	'000' = 120hz '001' = 95hz '010' = 80hz '011' = 70hz '100' = 60hz – default setting

Default

Status	Default Value(D7~D0)
Power On Sequence	0000_0100 (04h)
S/W Reset	0000_0100 (04h)
H/W Reset	0000_0100 (04h)

10.2.25 DISPCTRL (F5h): OTP and OSC function control

09H	RDDST (Read Display Status)												
Inst / Para	D/CX	WRX	RDX	D17-8	D7	D6	D5	D4	D3	D2	D1	D0	(Code)
DISPCTRL	0	↑	1	-	1	1	1	1	0	1	0	1	(F5h)
1st Parameter	1	1	↑	-	PDM1	PDM0	FLM	C8ON	EQPW1	EQPW0	EQVDD	ENGS	-

NOTE: "-" Don't care

Description

Bit	Description	Value
PDM	Vcom waveform setting within porch area	'00' = VcomL '01' = VcomH '10' = GND '11' = Hi-Z
FLM	Monochrom image detection Mono -> frame inversion Color -> line inversion	'1' = Enable the monochrom image detection function '0' = Disable the monochrom image detection function
C8ON	Monochrom line detection Mono -> OP-AMP off Color -> OP-AMP on	'1' = Enable the monochrom line detection function '0' = Disable the monochrom line detection function
EQPW	Equalization level setting	'00' = V0(+ frame), V63(- frame) '01' = V63(+ frame), V0(-frame)

			'10' = GND(+frame), GND(-frame), ps. EQVDD='0' '10' = VDD(+frame), GND(-frame), ps. EQVDD='1' '11' = Hi-Z(+frame), Hi-Z(-frame)
	EQVDD	Equalization level setting	'1' = VDD(+frame), GND(-frame) mode, ps. EQPW='10' '0' = GND(+frame), GND(-frame) mode, ps. EQPW='10'
	ENGS	Gate scan direction setting	'1' = G1 ~ G162 '0' = G162 ~ G1

Default

Status	Default Value(D7~D0)
Power On Sequence	0001_1010 (1Ah)
S/W Reset	0001_1010 (1Ah)
H/W Reset	0001_1010 (1Ah)

10.2.26 DEFADJ (F6h): Default mode setting

09H	RDDST (Read Display Status)												
Inst / Para	D/CX	WRX	RDX	D17-8	D7	D6	D5	D4	D3	D2	D1	D0	(Code)
DEFADJ	0	↑	1	-	1	1	1	1	0	1	1	0	(F6h)
1st Parameter	1	1	↑	-	0	1	0	0	0	1	0	TESEL OE	-

NOTE: "-" Don't care

Description

Bit	Description	Value
TESELOE	Output mode setting of TESEL pin	'1' = Enable the output mode of TESEL pin '0' = Disable the output mode of TESEL pin

Default

Status	Default Value(D7~D0)
Power On Sequence	0100_0100 (44h)
S/W Reset	0100_0100 (44h)
H/W Reset	0100_0100 (44h)

11. Power structure

11.1. Driver IC Operating voltages Specification

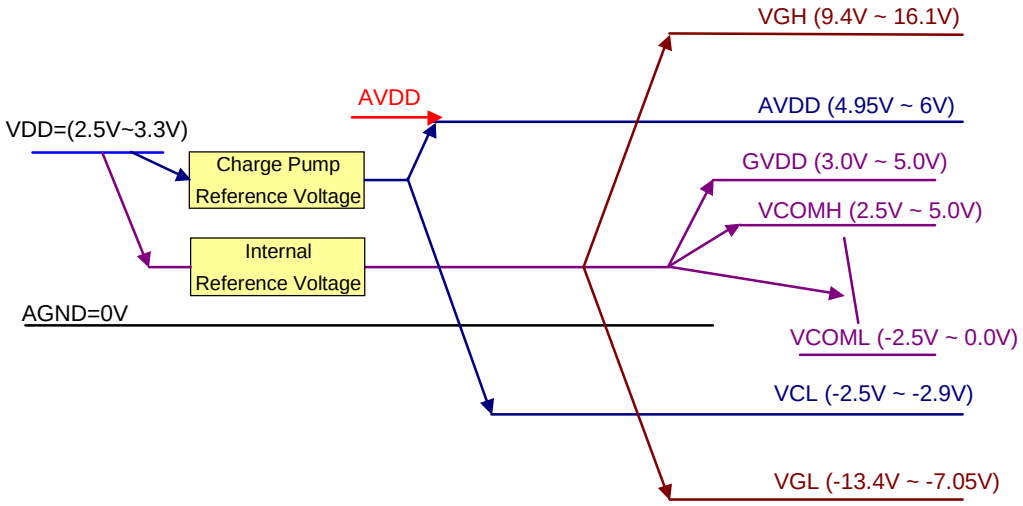

Fig. 11.1.1 Power Booster Level

Remark
1. AVDD supply to all power source (exclude VGH, VGL)
2. Source output range: 0.1V ~ AVDD-0.1V
3. Linear Range: 0.2V ~ AVDD-0.2V (For all output voltage, but exclude VGH, VGL)
4. Above operating voltages is min range.

11.2 Power Booster Circuit

11.2.1 VCI1 generate frome VDD regulator

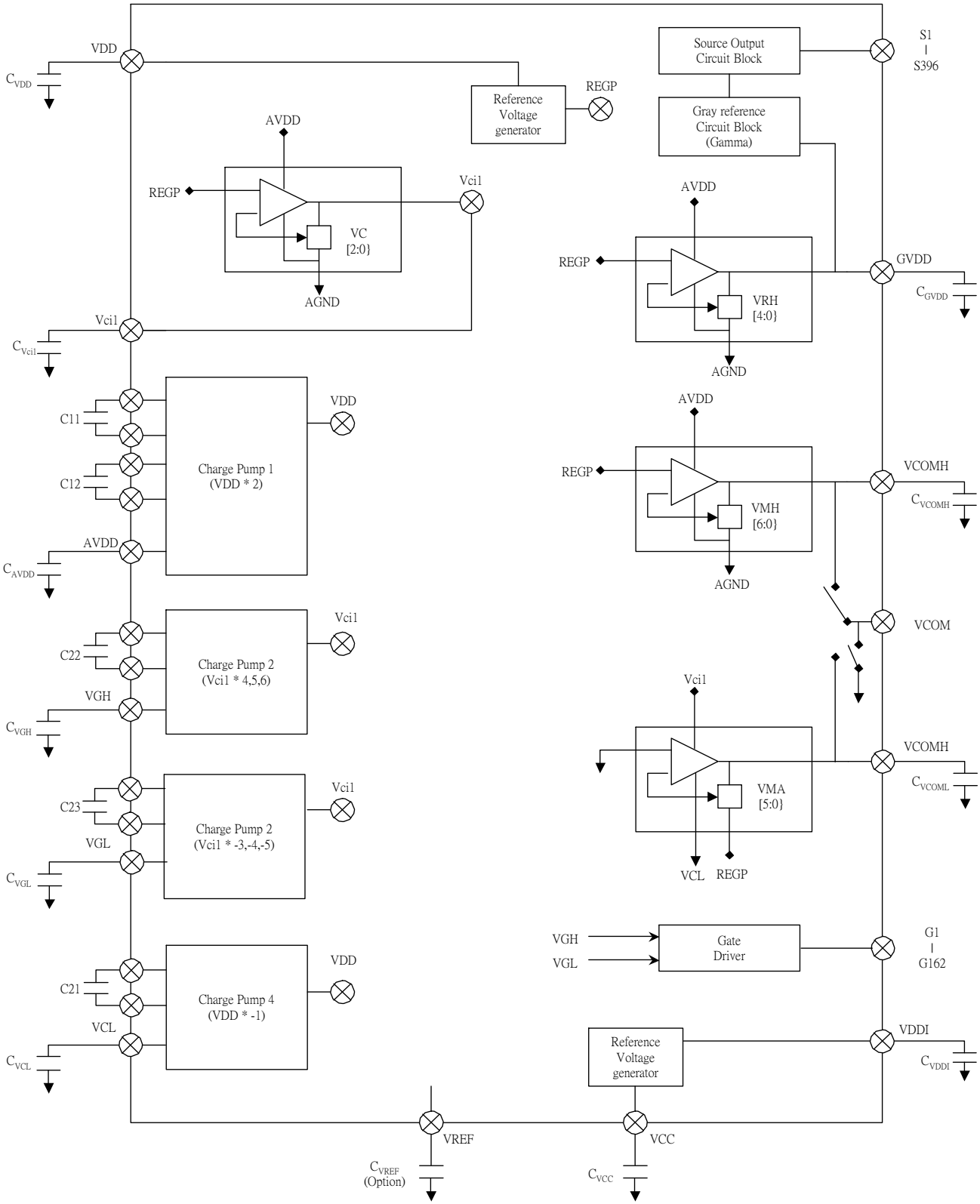

Fig. 11.2.1 Power Booster Structure (1)

11.2.2 EXTERNAL COMPONENTS CONNECTION

Pad Name	Connection	Rated (Min) Voltage	Typical capacitance value
VDDI	VDDI (Logic Power)	10.0V	1.0 uF
VDD	VDD (Analog Power)	10.0V	1.0 uF
VCC	Connect to Capacitor (Max 3V): VCC -------||-------- GND	10.0V	1.0 uF
AGND	Analog ground (Connect to GND)		
DGND	Digital ground (Connect to GND)		
C23P, C23N	Connect to Capacitor: C23P -------||--------C23N	25.0V; 16.0V*	1.0 uF
C22P, C22N	Connect to Capacitor: C22P -------||--------C22N	25.0V; 16.0V*	1.0 uF
C21P, C21N	Connect to Capacitor: C21P -------||--- -----C21N	10.0V	1.0 uF
C12P, C12N	Connect to Capacitor: C12P -------||--------C12N	10.0V	1.0 uF
C11P, C11N	Connect to Capacitor: C11P -------||--------C11N	10.0V	1.0 uF
AVDD	Connect to Capacitor: AVDD -------||-------- GND	10.0V	1.0 uF
VCI1	Connect to Capacitor: AVDD -------||-------- GND	10.0V	1.0 uF
VGH	Connect to Capacitor: VGH -------||-------- GND	25.0V; 16.0V*	1.0 uF
VGL	Connect to Capacitor: VGL -------||-------- GND	25.0V; 16.0V*	1.0 uF
VCL	Connect to Capacitor: VCL -------||-------- GND	10.0V	1.0 uF
VREF	Connect to Capacitor: VREF -------||-------- GND	10.0V	1.0 uF
GVDD	Connect to Capacitor: GVDD -------||-------- GND	10.0V	1.0 uF
VCOMH	Connect to Capacitor: VCOMH-------||--------- GND	10.0V	1.0 uF
VCOML	Connect to Capacitor: VCOML -------||-------- GND	10.0V	1.0 uF

Note: For the typical specification of capacitor, the surge voltage is 125% of rated voltage. The capacitor of rated voltage of 16V can be only used for the case of VGH < 12.8V and VGL > -12.8V to prevent from stability issue. For normal usage, please use the capacitor of 25V rating.

12. Gamma structure

12.1 STRUCTURE OF GRAYSCALE AMPLIFIER

The structure of grayscale amplifier is shown as below. 13 voltage levels (VIP(N)0-VIP(N)12) between GVDD and VGS are determined by the high/ mid/ low level adjustment registers.

Gray Level	Voltage Formula (Positive)	Voltage Formula (Negative)
0	VINP0	VINN0
1	VINP1	VINN1
2	V1-(V1-V3)*(16/30)	V1-(V1-V3)*(18/30)
3	VINP2	VINP(N)2
4	V3-(V3-V6)*(11/30)	V3-(V3-V6)*(12/30)
5	V3-(V3-V6)*(21/30)	V3-(V3-V6)*(22/30)
6	VINP3	VINN3
7	V6-(V6-V11)*(7/30)	V6-(V6-V11)*(7/30)
8	V6-(V6-V11)*(14/30)	V6-(V6-V11)*(13/30)
9	V6-(V6-V11)*(20/30)	V6-(V6-V11)*(19/30)
10	V6-(V6-V11)*(25/30)	V6-(V6-V11)*(25/30)
11	VINP4	VINN4
12	V11-(V11-V20)*(4/30)	V11-(V11-V20)*(4/36)
13	V11-(V11-V20)*(8/30)	V11-(V11-V20)*(8/36)
14	V11-(V11-V20)*(12/30)	V11-(V11-V20)*(12/36)
15	V11-(V11-V20)*(16/30)	V11-(V11-V20)*(16/36)
16	V11-(V11-V20)*(19/30)	V11-(V11-V20)*(20/36)
17	V11-(V11-V20)*(22/30)	V11-(V11-V20)*(24/36)
18	V11-(V11-V20)*(25/30)	V11-(V11-V20)*(28/36)
19	V11-(V11-V20)*(28/30)	V11-(V11-V20)*(32/36)
20	VINP5	VINN5
21	V20-(V20-V31)*(3/30)	V20-(V20-V32)*(3/36)
22	V20-(V20-V31)* (6/30)	V20-(V20-V32)*(6/36)
23	V20-(V20-V31)* (9/30)	V20-(V20-V32)*(9/36)
24	V20-(V20-V31)* (12/30)	V20-(V20-V32)*(12/36)
25	V20-(V20-V31)* (15/30)	V20-(V20-V32)*(15/36)
26	V20-(V20-V31)* (18/30)	V20-(V20-V32)*(18/36)
27	V20-(V20-V31)* (21/30)	V20-(V20-V32)*(21/36)
28	V20-(V20-V31)* (23/30)	V20-(V20-V32)*(24/36)
29	V20-(V20-V31)* (25/30)	V20-(V20-V32)*(27/36)
30	V20-(V20-V31)* (27/30)	V20-(V20-V32)*(30/36)
31	VINP6	V20-(V20-V32)*(33/36)
32	V31-(V31-V43)*(3/36)	VINN6
33	V31-(V31-V43)*(6/36)	V32-(V32-V43)*(3/30)
34	V31-(V31-V43)*(9/36)	V32-(V32-V43)*(5/30)
35	V31-(V31-V43)*(12/36)	V32-(V32-V43)*(7/30)

36	V31-(V31-V43)*(15/36)	V32-(V32-V43)*(9/30)
37	V31-(V31-V43)*(18/36)	V32-(V32-V43)*(12/30)
38	V31-(V31-V43)*(21/36)	V32-(V32-V43)*(15/30)
39	V31-(V31-V43)*(24/36)	V32-(V32-V43)*(18/30)
40	V31-(V31-V43)*(27/36)	V32-(V32-V43)*(21/30)
41	V31-(V31-V43)*(30/36)	V32-(V32-V43)*(24/30)
42	V31-(V31-V43)*(33/36)	V32-(V32-V43)*(27/30)
43	VINP7	VINN7
44	V43-(V43-V52)*(4/36)	V43-(V43-V52)*(2/30)
45	V43-(V43-V52)*(8/36)	V43-(V43-V52)*(5/30)
46	V43-(V43-V52)*(12/36)	V43-(V43-V52)*(8/30)
47	V43-(V43-V52)*(16/36)	V43-(V43-V52)*(11/30)
48	V43-(V43-V52)*(20/36)	V43-(V43-V52)*(14/30)
49	V43-(V43-V52)*(24/36)	V43-(V43-V52)*(18/30)
50	V43-(V43-V52)*(28/36)	V43-(V43-V52)*(22/30)
51	V43-(V43-V52)*(32/36)	V43-(V43-V52)*(26/30)
52	VINP8	VINN8
53	V52-(V52-V57)*(5/30)	V52-(V52-V57)*(5/30)
54	V52-(V52-V57)*(11/30)	V52-(V52-V57)*(10/30)
55	V52-(V52-V57)*(17/30)	V52-(V52-V57)*(16/30)
56	V52-(V52-V57)*(23/30)	V52-(V52-V57)*(23/30)
57	VINP9	VINN9
58	V57-(V57-V60)*(8/30)	V57-(V57-V60)*(9/30)
59	V57-(V57-V60)*(18/30)	V57-(V57-V60)*(19/30)
60	VINP10	VINN10
61	V60-(V60-V62)*(12/30)	V60-(V60-V62)*(14/30)
62	VINP11	VINN11
63	VINP12	VINN12

13. Example Connection with Panel direction and Different Resolution

13.1 Application of connection with panel direction

Case 1: (This is default case)
- 1st Pixel is at *Left Top* of the panel
- RGB filter order = RGB

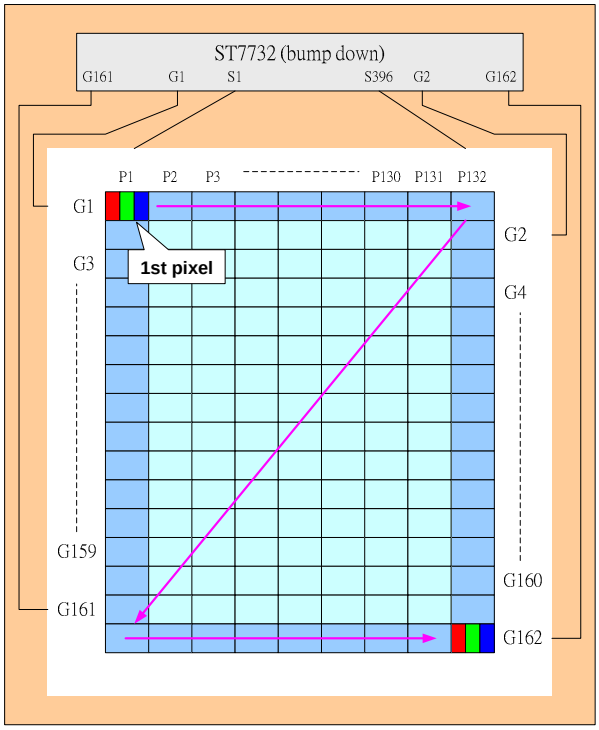

- Direction default setting (H/W)
SMX = ' 0'
SMY = '0'
SRGB = '0'
S1 = Filter R
S2 = Filter G
S3 = Filter B
- Display direction control (S/W)
- X-Mirror control by MX
- Y-Mirror control by MY
- XY-Exchange control by MV

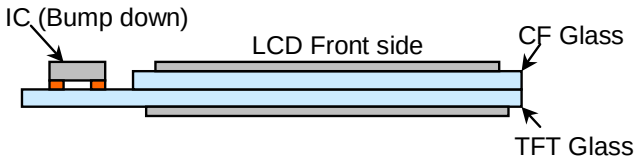

Case 2:
- 1st Pixel is at *Left Top* of the panel
- RGB filter order = BGR

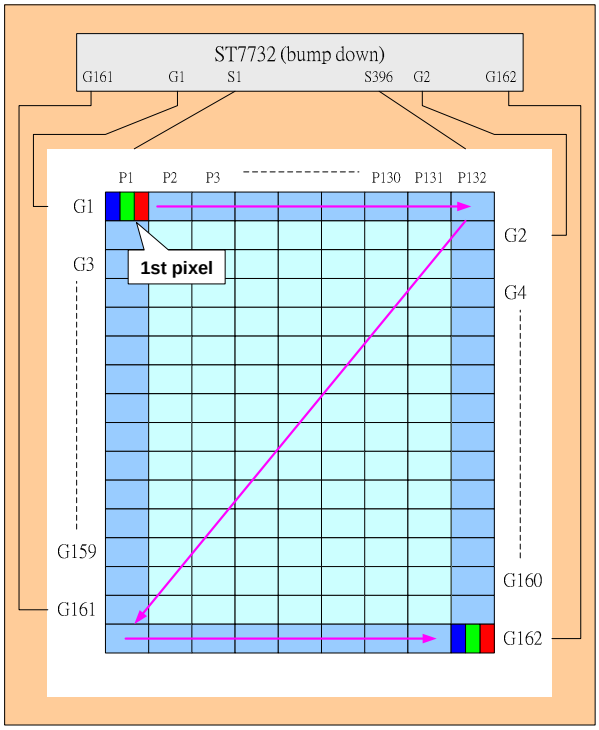

- Direction default setting (H/W)
SMX = ' 0'
SMY = '0'
SRGB = '1'
S1 = Filter B
S2 = Filter G
S3 = Filter R
- Display direction control (S/W)
- X-Mirror control by MX
- Y-Mirror control by MY
- XY-Exchange control by MV

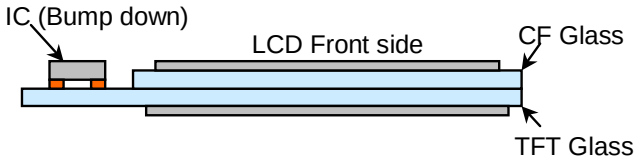

Case 3:
- 1st Pixel is at *Righ Bottom* of the panel
- RGB filter order = RGB

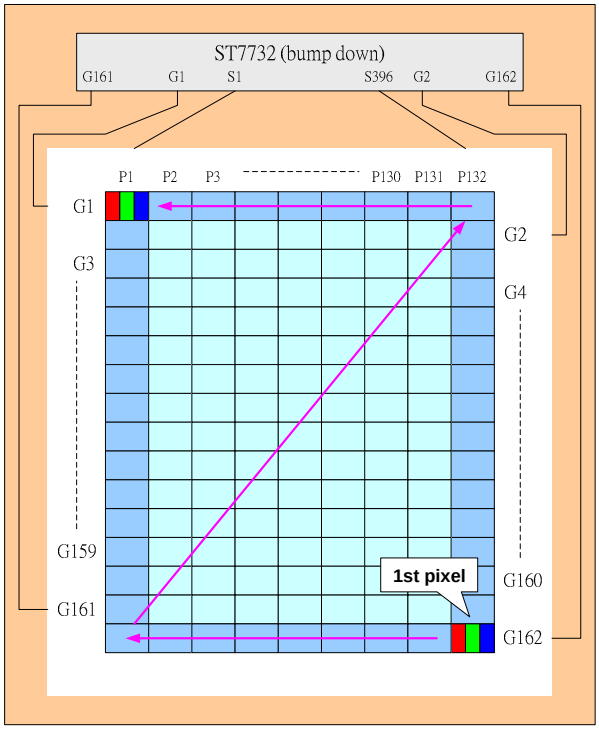

- Direction default setting (H/W)
SMX = ' 1'
SMY = '1'
SRGB = '0'
S1 = Filter R
S2 = Filter G
S3 = Filter B
- Display direction control (S/W)
- X-Mirror control by MX
- Y-Mirror control by MY
- XY-Exchange control by MV

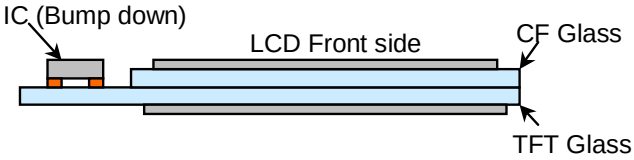

Case 4:
- 1st Pixel is at *Righ Bottom* of the panel
- RGB filter order = BGR

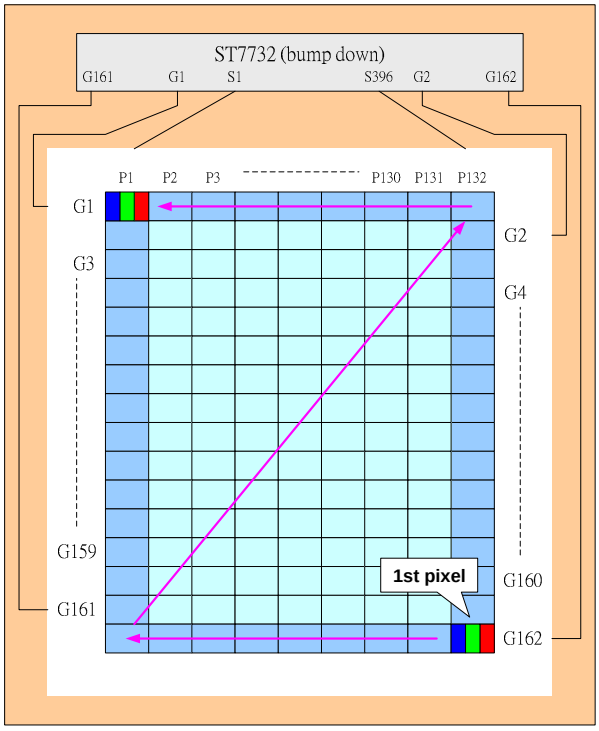

- Direction default setting (H/W)
SMX = '1'
SMY = '1'
SRGB = '1'
S1 = Filter B
S2 = Filter G
S3 = Filter R
- Display direction control (S/W)
- X-Mirror control by MX
- Y-Mirror control by MY
- XY-Exchange control by MV

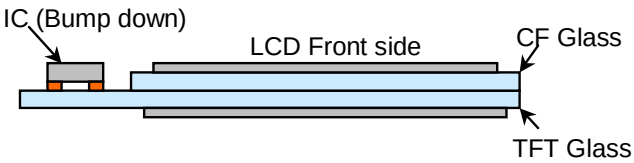

13.2 Application of connection with Different resolution

Case 1 of Resolution (128RGB x 160) (GM1, GM0 = “00”)
RAM size=128 x 160 x 18-bit (Used)
Display size = 128RGB x 160

1). Example for SMX=SMY=’0’

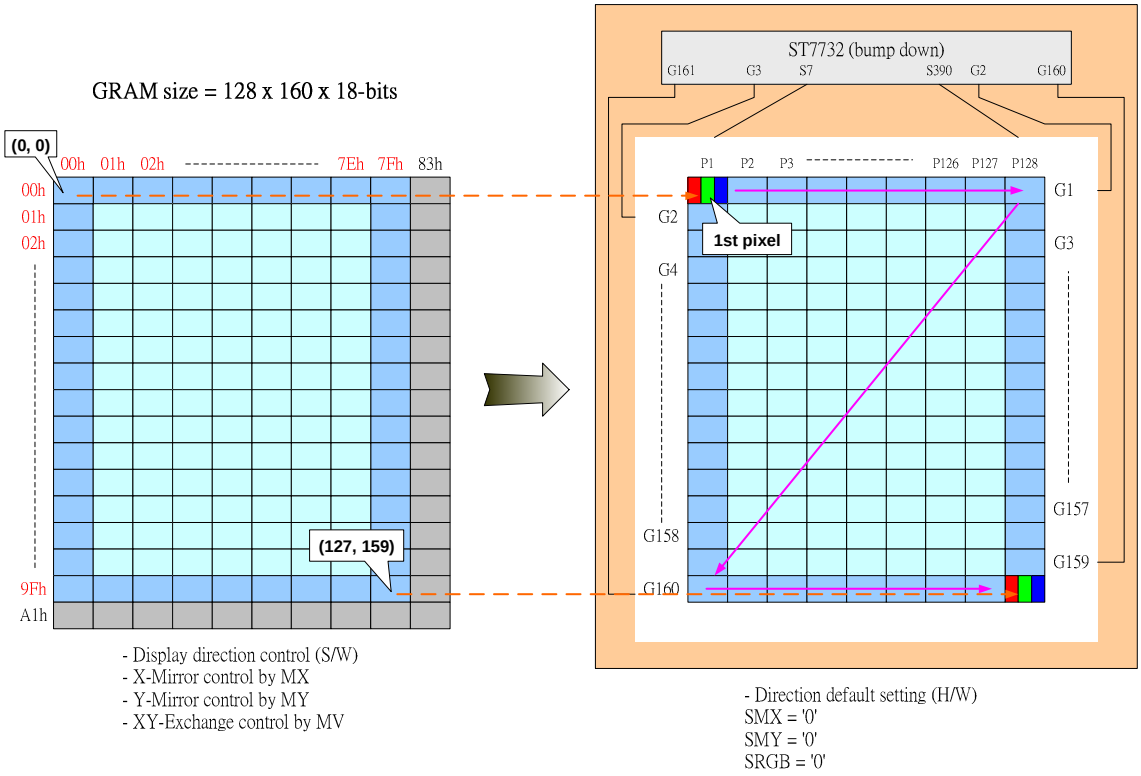

2). Example for SMX=SMY=’1’

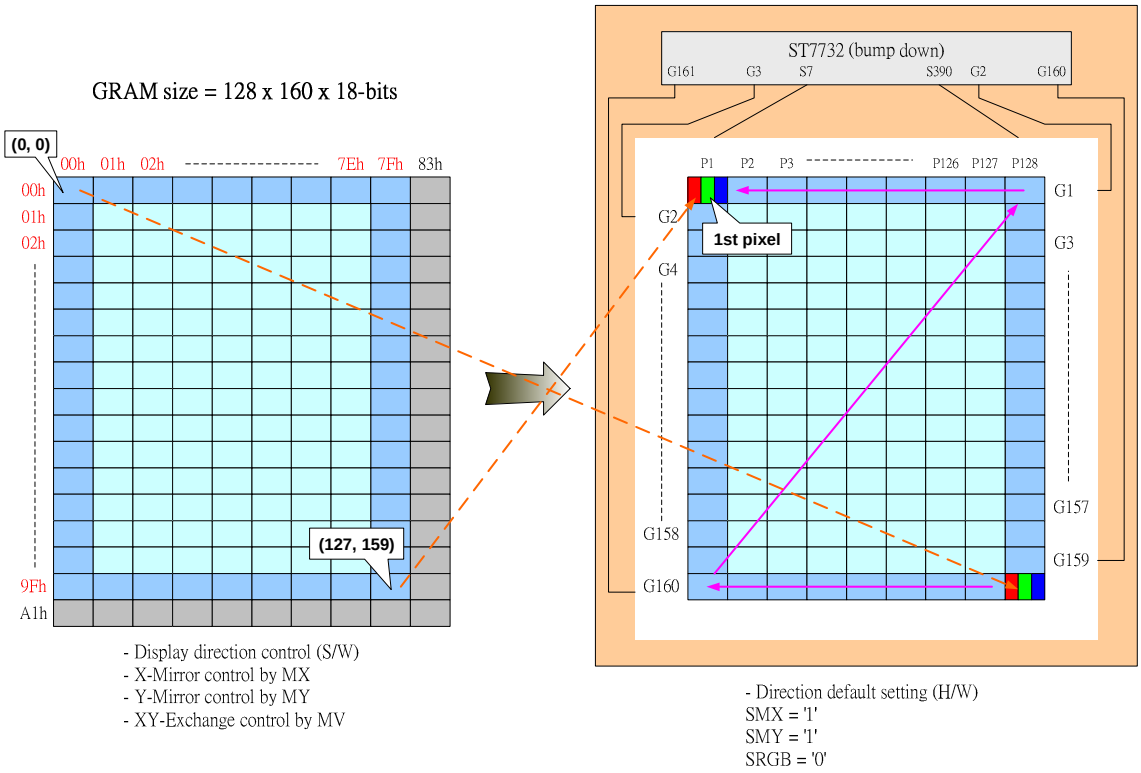
GRAM size = 128 x 160 x 18-bits
(0, 0)
00h 01h 02h 7Eh 7Fh 83h
00h
01h
02h
9Fh
A1h
(127, 159)
- Display direction control (S/W)
- X-Mirror control by MX
- Y-Mirror control by MY
- XY-Exchange control by MV
ST7732 (bump down)
G161 G3 S7 S390 G2 G160
P1 P2 P3 P126 P127 P128
G1
G2
G3
G4
1st pixel
G157
G158
G159
G160
- Direction default setting (H/W)
SMX = '1'
SMY = '1'
SRGB = '0'

Case 2 of Resolution (120RGB x 160) (GM1, GM0 = “01”)

RAM size=120 x 160 x 18-bit (Used)
Display size = 120RGB x 160

1). Example for SMX=SMY=’0’

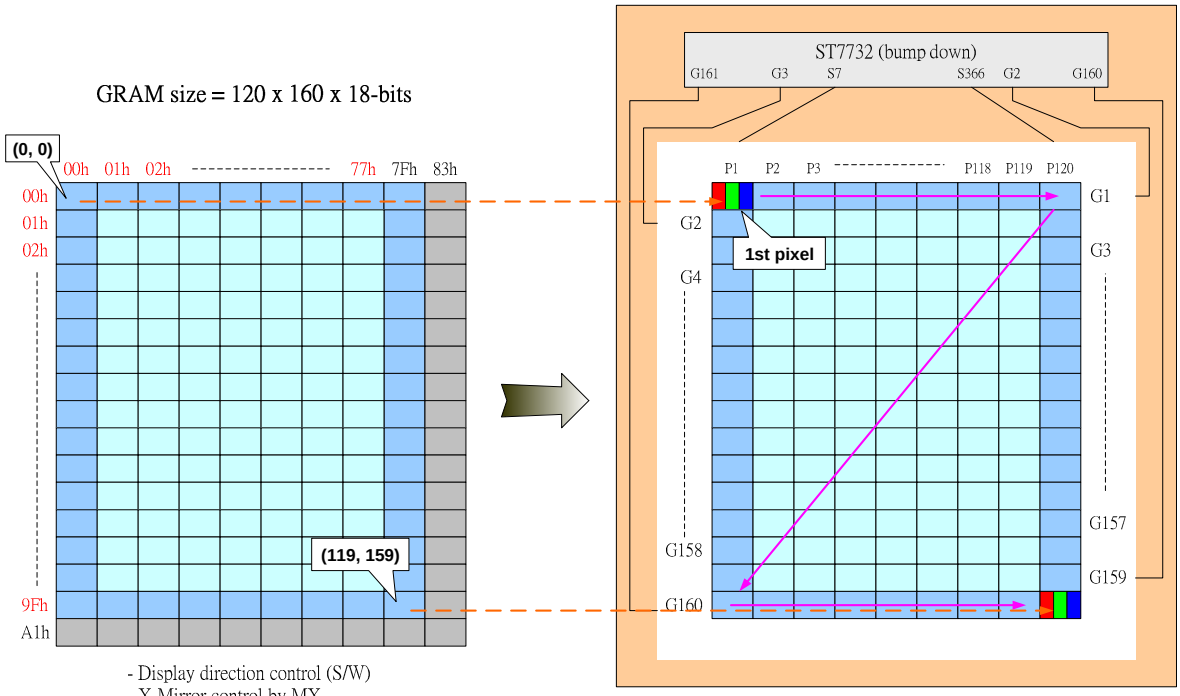

- Display direction control (S/W)
- X-Mirror control by MX
- Y-Mirror control by MY
- XY-Exchange control by MV

- Direction default setting (H/W)
SMX = '0'
SMY = '0'
SRGB = '0'

2). Example for SMX=SMY=’1’

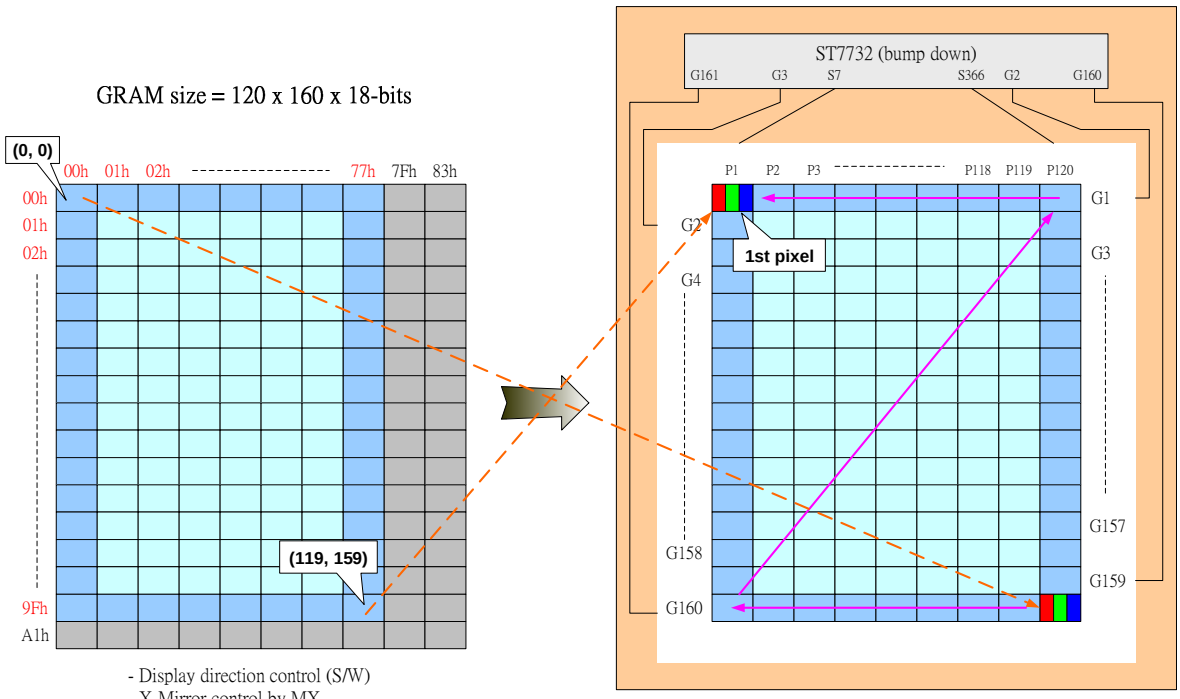

- Display direction control (S/W)
- X-Mirror control by MX
- Y-Mirror control by MY
- XY-Exchange control by MV

- Direction default setting (H/W)
SMX = '1'
SMY = '1'
SRGB = '0'

Case 3 of Resolution (132RGB x 162) (GM1, GM0 = “11”)

RAM size=132 x 162 x 18-bit (Used)
Display size = 132RGB x 162

1). Example for SMX=SMY=’0’

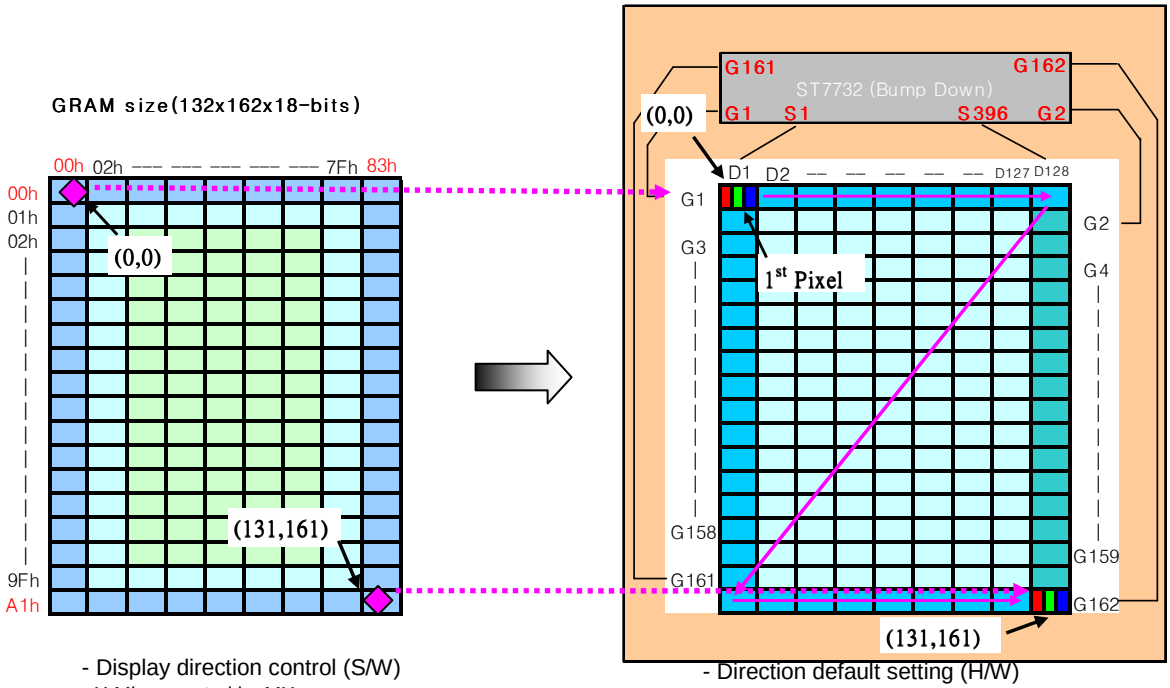

- Display direction control (S/W)
- X-Mirror control by MX
- Y-Mirror control by MY
- XY-Exchange control by MV

- Direction default setting (H/W)
SMX = ’0’
SMY = ’0’
SRGB = ‘0’

2). Example for SMX=SMY=’1’

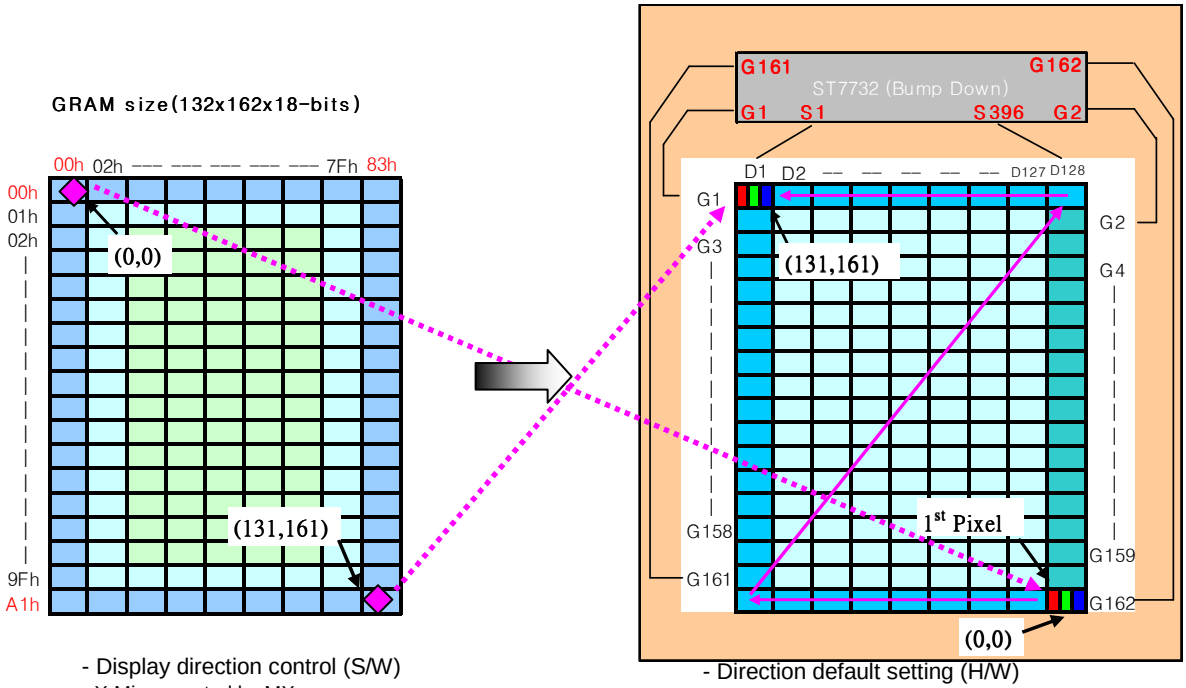

- Display direction control (S/W)
- X-Mirror control by MX
- Y-Mirror control by MY
- XY-Exchange control by MV

- Direction default setting (H/W)
SMX = ’1’
SMY = ‘1’
SRGB = ‘0’

13.3 MicroProcessor Interface applications

13.3.1 8080-Seriers MCU + SPI Interface (RCM = ‘0x’, P68=’0’, IM2=’1’)

13.3.1.1 8080-Series MCU Interface for 8-bit data bus (IM1, IM0=”00”)

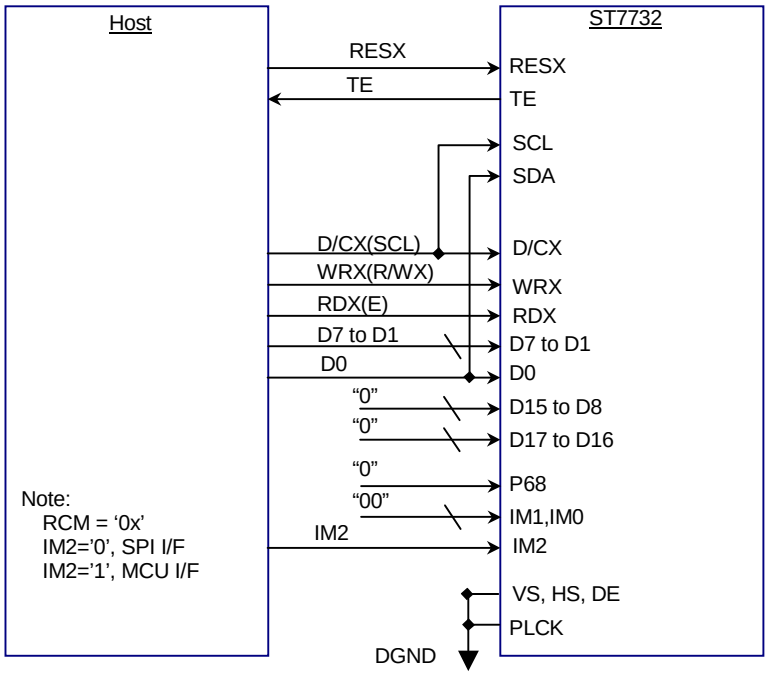

Fig. 13.3.1.1 8080-Series MCU Interface for 8-bit data bus

13.3.1.2 8080-Series MCU Interface for 16-bit data bus (IM1, IM0=”01”)

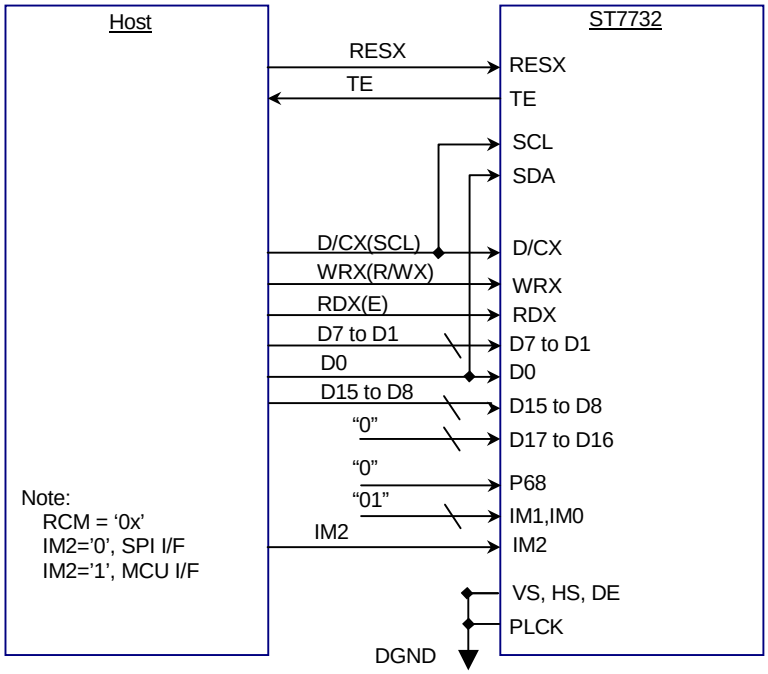

Fig. 13.3.1.2 8080-Series MCU Interface for 16-bit data bus

13.3.1.3 8080-Series MCU Interface for 9-bit data bus (IM1, IM0=”10”)

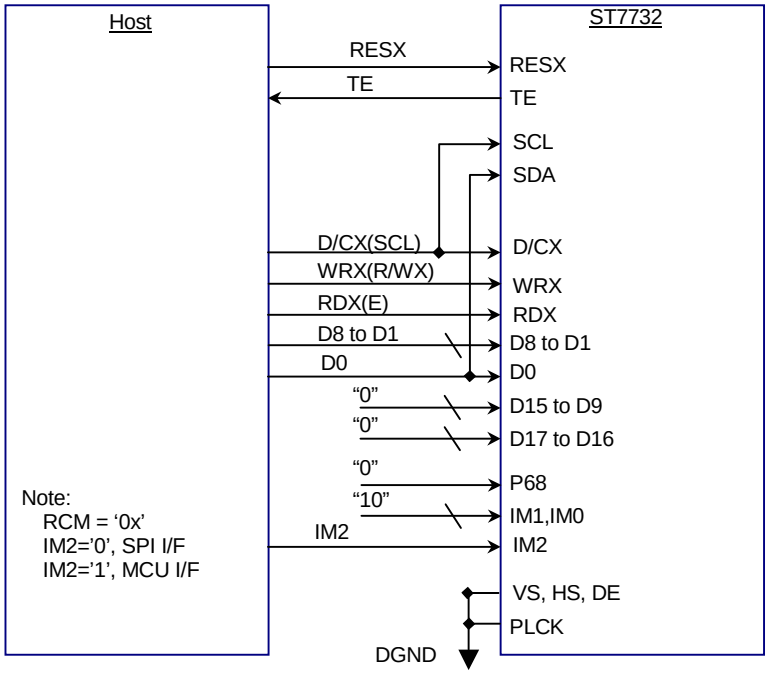

Fig. 13.3.1.3 8080-Series MCU Interface for 9-bit data bus

13.3.1.4 8080-Series MCU Interface for 18-bit data bus (IM1, IM0=”11”)

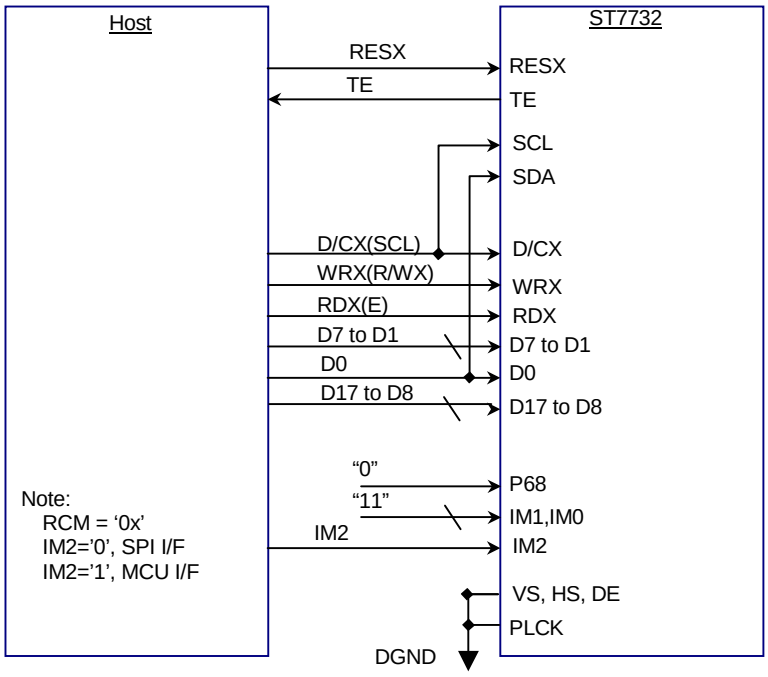

Fig. 13.3.1.4 8080-Series MCU Interface for 18-bit data bus

13.3.2 6800-Seriers MCU + SPI Interface (RCM = ‘0x’, P68=’1’, IM2=’1’)

13.3.2.1 6800-Series MCU Interface for 8-bit data bus (IM1, IM0=”00”)

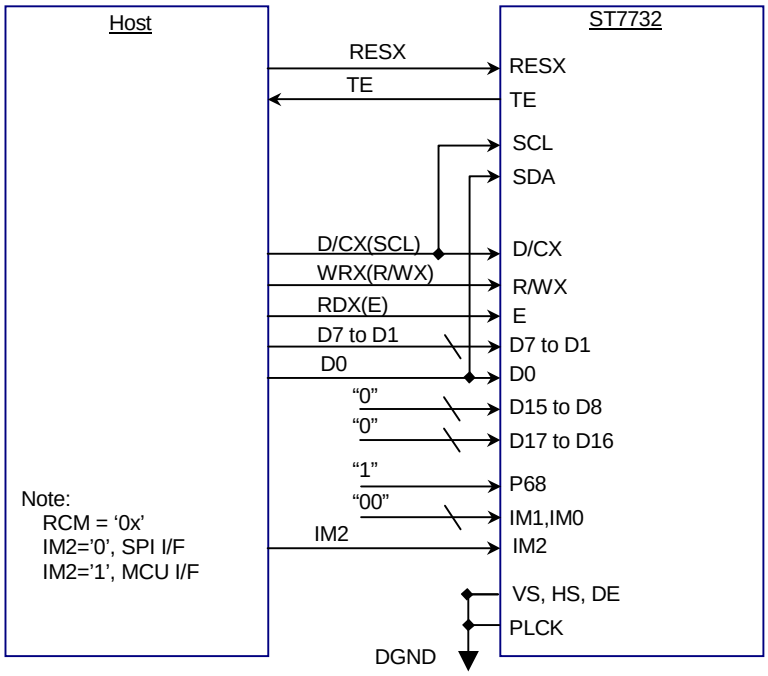

Fig. 13.3.2.1 6800-Series MCU Interface for 8-bit data bus

13.3.2.2 6800-Series MCU Interface for 16-bit data bus (IM1, IM0=”01”)

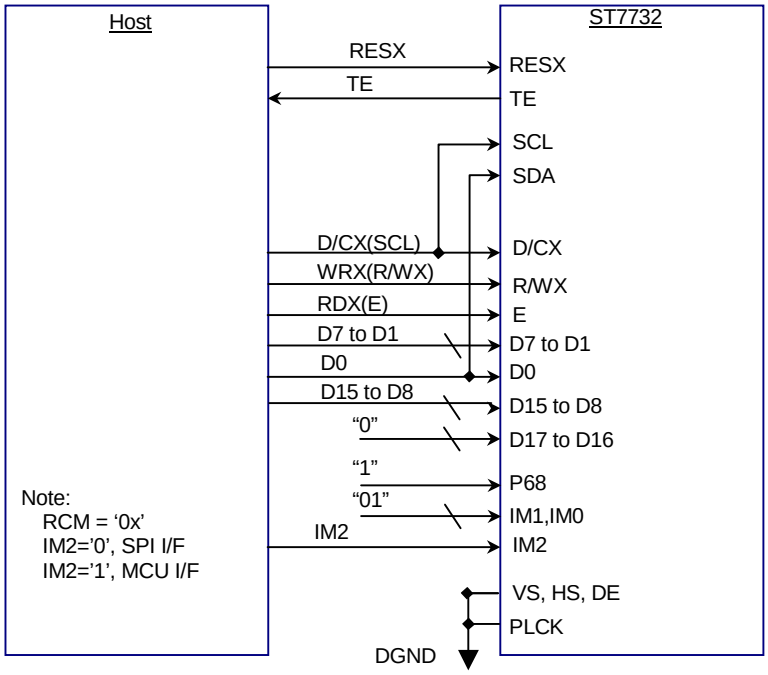

Fig. 13.3.2.2 6800-Series MCU Interface for 16-bit data bus

13.3.2.3 6800-Series MCU Interface for 9-bit data bus (IM1, IM0=”10”)

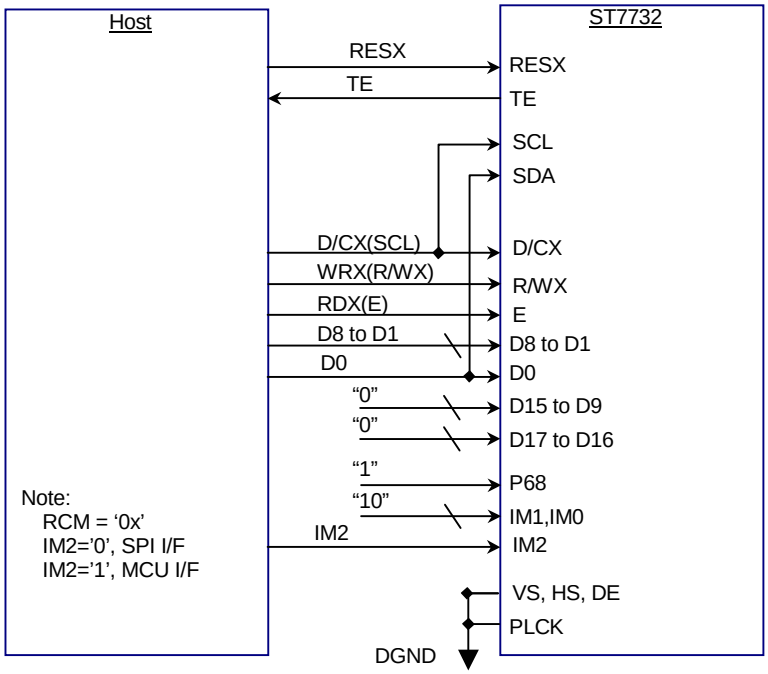

Fig. 13.3.2.3 6800-Series MCU Interface for 9-bit data bus

13.3.2.4 6800-Series MCU Interface for 18-bit data bus (IM1, IM0=”11”)

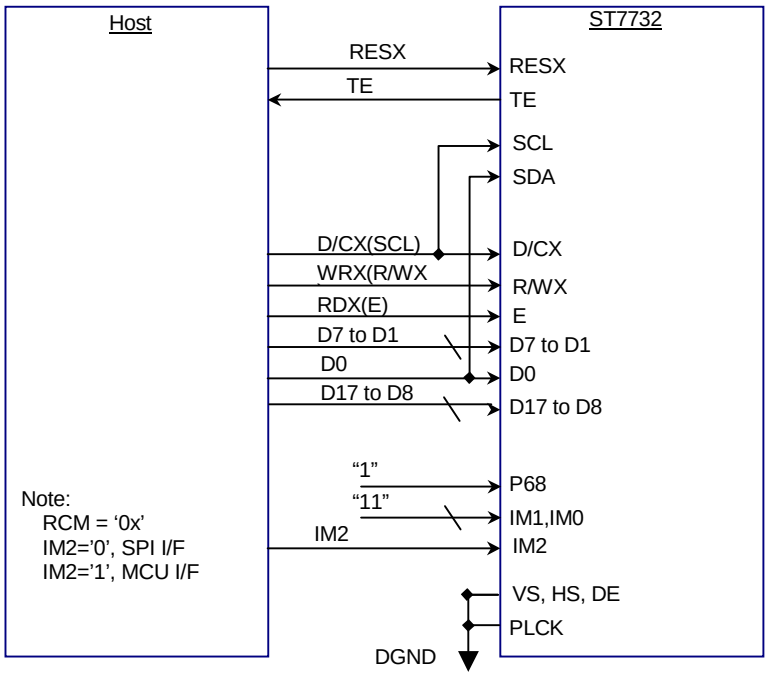

Fig. 13.3.2.4 6800-Series MCU Interface for 18-bit data bus

13.3.3 RGB Interface (RCM = '1')

13.3.3.1 RGBInterface for 6-bit Data Width

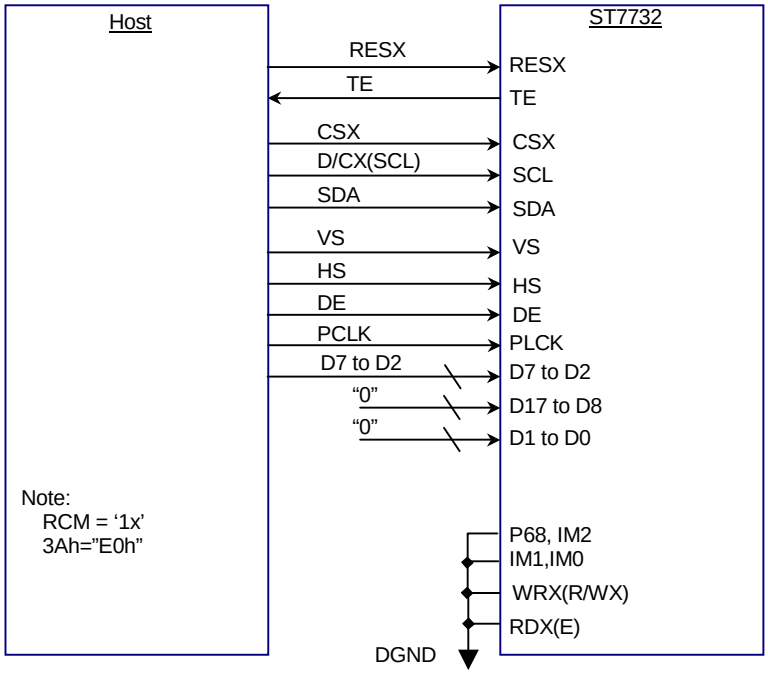

Fig. 13.3.3.1 RGB Interface for 8-bit data width

13.3.3.2 RGBInterface for 16-bit Data Width

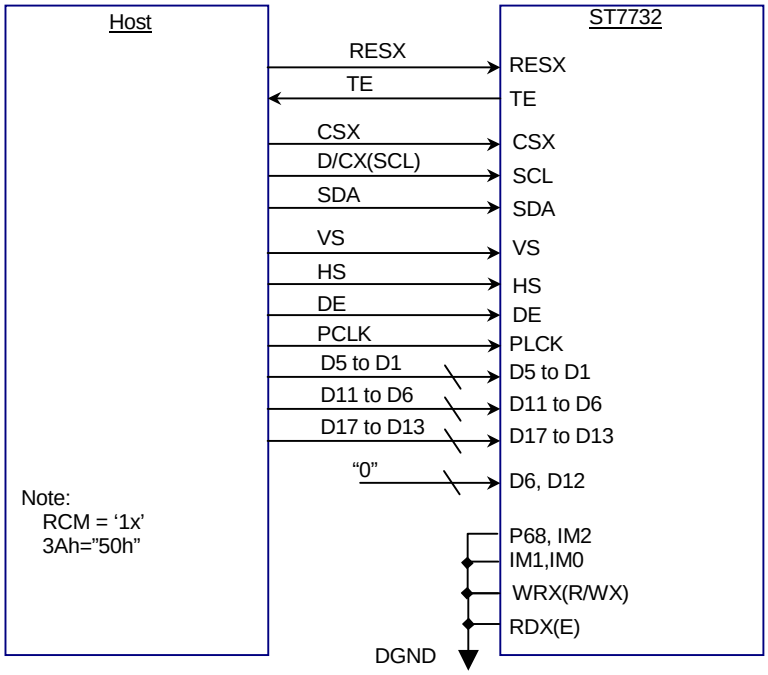

Fig. 13.3.3.2 RGB Interface for 16-bit data width

13.3.3.3 RGBInterface for 18-bit Data Width

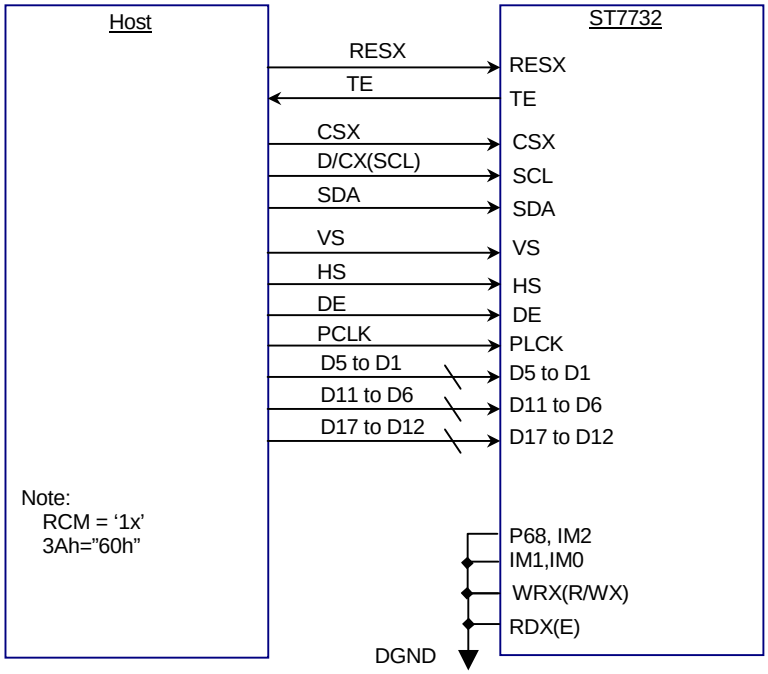

Fig. 13.3.3.3 RGB Interface for 18-bit data width

14. Revision History

ST7732 Specification Revision History		
Version	**Date**	**Description**
0.x		Preliminary version
1.0	2007/05/16	First issue
1.1	2007/06/12	Modified timing of 3-SPI and 4-SPI. (8.3, p-23; 8.4, p-24) Modified display off function. (10.1.18, p-120) Add notes of 262K read function (10.1.23, p-125; 10.1.33, p-135) Modified cap. rating voltage (11.2.2, p-155)
1.2	2007/07/10	Removed RGBSET command 2Dh (10.1.24 p-106, p-125)
1.3	2007/08	Modified timing of CSX hold time for all I/F(8.1, p-21; 8.2, p-23; 8.4, p-24) Modified the power system diagram(11.2.1, p-154) Correct the typo of component table(11.2.2, p-155)
1.3.1	2007/08	Modified component table(11.2, p-154,155)
1.4	2007/09	Revise the waiting time of HW reset(9.18.2 P91) Revise the description of command 01h, 10h,11h, 28h (10.1.2 P111; 10.1.11 P116; 10.1.12 P117; 10.1.18 P120)
1.5	2007/10	Modify the description of power on/off sequence(9.15 P84) Remove table 9.18.3.1 reset input timing(9.18.3 P90) Modify the figure of reset timing (9.18.3 P90) Modify the waiting time of SWReset to 120ms (10.1.2 P110) Modify the waiting time of SLPout mode to 120ms (10.1.12 P116)

With collaboration of https://www.displayfuture.com