DATA SHEET

(DOC No. HX8238-D-DS)

HX8238-D

960 x 240 TFT LCD Single Chip Digital Driver

Preliminary version 01 November, 2007

Himax Technologies, Inc.
http://www.himax.com.tw

List of Contents

1. General Description **6**

2. Features **6**

3. Block Diagram **7**

4. PAD Assignment **8**

5. Pin Description **9**

6. Block Function Description **12**

6.1 SERIAL INTERFACE 12
6.2 DATA CONTROL 13
6.3 GAMMA/GRAYSCALE VOLTAGE GENERATOR 13
6.4 BOOST AND REGULATOR CIRCUIT 13
6.5 PWM BOOST CONVERTER 13
6.6 SHIFT REGISTER 14
6.7 DATA LATCHES 14
6.8 AGING MODE 14
6.9 RESET CIRCUIT 14

7 3-Wire Serial Port Interface **15**

7.1 PRIMARY REGISTER COMMAND TABLE 15
7.2 PRIMARY REGISTER DEFAULT VALUE 16
7.3 PRIMARY REGISTER COMMAND DESCRIPTION 17
7.4 SECONDARY REGISTER COMMAND TABLE 31
7.5 SECONDARY REGISTER DEFAULT VALUE 32
7.6 SECONDARY REGSITER COMMAND DESCRIPTION 33
7.7 POWER UP/DOWN SEQUENCE OF THE SECONDARY REGISTER COMMAND 42

8. OTP Programming **44**

9. Gamma Adjustment Function **45**

9.1 STRUCTURE OF GRAYSCALE AMPLIFIER 46
9.2 GAMMA ADJUSTMENT REGISTER 48
9.2.1 Gradient Adjusting Register 48
9.2.2 Amplitude Adjusting Register 48
9.2.3 Micro Adjusting Register 48
9.3 LADDER RESISTOR / 8 TO 1 SELECTOR 49

10. Maximum Rating **53**

11. DC Characteristics **54**

12. AC Characteristics **55**

13. HX8238-D Output Voltage Relationship **67**

14. Application Circuit **68**

15. Revision History **71**

Himax Confidential
For Innolux Only
Do Not Copy

This information contained herein is the exclusive property of Himax and shall not be distributed, reproduced, or disclosed in whole or in part without prior written permission of Himax.

List of Figures

Figure 6. 1 SPI Timing 12
Figure 6. 2 13

Figure 7. 1 Status Read 17
Figure 7. 2 Driver Output Control 17
Figure 7. 3 Scan Direction & Display 18
Figure 7. 4 LCD-Driving-Waveform Control 19
Figure 7. 5 Power Control 1 19
Figure 7. 6 Input Data and Color Filter Control 20
Figure 7. 7 PWM for External LED driver Control 22
Figure 7. 8 Contrast/Brightness Control 23
Figure 7. 9 Power Control 2 23
Figure 7. 10 Power Control 3 25
Figure 7. 11 Gate Scan Position 25
Figure 7. 12 Gate Scan Display Position 25
Figure 7. 13 Horizontal Porch 26
Figure 7. 14 Vertical Porch 27
Figure 7. 15 No. of Clock Cycle of Clock 27
Figure 7. 16 No. of Clock Cycle of HSYNC 28
Figure 7. 17 Power Control 4 29
Figure 7. 18 Gamma Control 1 30
Figure 7. 19 Gamma Control 2 30
Figure 7. 20 Display Interface Control Instruction 33
Figure 7. 21 Entry Mode Instruction 34
Figure 7. 22 Display Direction According To SS, RGB 35
Figure 7. 23 Gate Control1 Instruction 36
Figure 7. 24 CLW Bits 36
Figure 7. 25 Gate Control2 Instruction 37
Figure 7. 26 Display Control1 Instruction 37
Figure 7. 27 Display Control2 Instruction 38
Figure 7. 28 Power Control1 Instruction 39
Figure 7. 29 Power Control 40
Figure 7. 30 Gamma Control 1 41
Figure 7. 31 Gamma Control 2 41
Figure 7. 32 Power Up Sequence when SPSW connect to VSS (CPE = VSS) 42
Figure 7. 33 Power Down Sequence when SPSW connect to VSS (CPE = VSS) 43

Figure 8. 1 OTP Read Table 44
Figure 8. 2 OTP Programming Circuitry 44

Figure 9. 1 Grayscale Control Block 45
Figure 9. 2 Grayscale Amplifier 46
Figure 9. 3 Resistor Ladder for Gamma Voltages Generation 47
Figure 9. 4 Gamma Adjustment Function 48

Himax Confidential
For Internal Use Only
Do Not Copy

This information contained herein is the exclusive property of Himax and shall not be distributed, reproduced, or disclosed in whole or in part without prior written permission of Himax.

List of Figures

Figure 12. 1 Pixel Timing 55
Figure 12. 2 Data Transaction Timing in Parallel RGB (24 bit) Interface (SYNC Mode) 56
Figure 12. 3 Data Transaction Timing in Serial RGB (8 bit) Interface (SYNC Mode) 57
Figure 12. 4 Signal Timing in DE Mode 58
Figure 12. 5 Color Mode Conversion Timing 58
Figure 12. 6 CCIR601 Horizontal Timing 59
Figure 12. 7 CCIR601 Vertical Timing 60
Figure 12. 8 CCIR656 Horizontal Timing 61
Figure 12. 9 CCIR656 Vertical Timing 62
Figure 12. 10 Power Up Sequence 63
Figure 12. 11 Power Down Sequence 64
Figure 12. 12 (a) SPI interface Timing Diagram & Write SPI Example 65
Figure 12. 13 (b) SPI interface Timing Diagram & Read SPI Example 66
Figure 12. 14 Rising/Falling time 66

Figure 13. 1 LCD Driving Voltage Relationship 67

Figure 14. 1 Booster Capacitors 68
Figure 14. 2 Power Supply Pins Connections 68
Figure 14. 3 Filtering and Charge Sharing Capacitors 69
Figure 14. 4 Panel and FPC Connection 69
Figure 14. 5 Panel Connection Example 70

Himax Confidential
For Innolux Only
Do Not Copy

This information contained herein is the exclusive property of Himax and shall not be distributed, reproduced, or disclosed in whole or in part without prior written permission of Himax.

List of Tables

Table 7. 1 Command Table (Primary Register Map) 15
Table 7. 2 Registers Default Value(Primary Register Map) 16
Table 7. 3 Source Output Level 17
Table 7. 4 Step-up Cycle 19
Table 7. 5 VGH and VGL Booster Ratio 19
Table 7. 6 Step-up Cycle 20
Table 7. 7 Op-amp Power 20
Table 7. 8 Color Filter Type 21
Table 7. 9 Interface Type 21
Table 7. 10 LED Driver Control Signal Frequency 22
Table 7. 11 VLCD63 Voltage 24
Table 7. 12 VCOM Amplitude 25
Table 7. 13 No. of Pixel Per Line 26
Table 7. 14 No. of Clock Cycle of Clock 27
Table 7. 15 No. of Clock Cycle of HSYNC 28
Table 7. 16 VCOMH 29
Table 7. 17 Command Table 31
Table 7. 18 Registers Default Value(Secondary Register Map) 32
Table 7. 19 REV Bit And Source Output Level Of Displayed Area 33
Table 7. 20 CLW Bits Setting 36
Table 7. 21 SAP Bits Setting 39
Table 7. 22 VCOM Amplitude 40
Table 7. 23 VCOMH 40

Table 8. 1 OTP Programming Sequence 44

Table 9. 1 PRP(N) 49
Table 9. 2 VRP(N)0 49
Table 9. 3 VRP(N)1 49
Table 9. 4 PKP and PKN 49
Table 9. 5 Grayscale Voltages Formulas 50
Table 9. 6 Reference Voltages of Positive Polarity 51
Table 9. 7 Reference Voltages of Negative Polarity 52

Table 10. 1 Maximum Ratings 53

Table 11. 1 DC Characteristics 54

Himax Confidential
For Innolux Only
Do Not Copy

This information contained herein is the exclusive property of Himax and shall not be distributed, reproduced, or disclosed in whole or in part without prior written permission of Himax.

List of Tables

Table 12. 1 Pixel Timing 55
Table 12. 2 Data Transaction Timing in Normal Operating Mode 56
Table 12. 3 Power Up Sequence 63
Table 12. 4 Power Down Sequence 64
Table 12. 5 SPI Timing 66

Himax Confidential
For Innolux Only
Do Not Copy

This information contained herein is the exclusive property of Himax and shall not be distributed, reproduced, or disclosed in whole or in part without prior written permission of Himax.

1. General Description

The HX8238-D is a single chip controller and driver LSI that integrates the power circuit. It can drive a maximum 960x240 dot graphics on a-TFT panel displays in 262K colors.

The HX8238-D has a low-voltage operation, 1.8 min voltage. In addition, The HX8238-D is equipped with a DC-DC converter control circuit that generates the supply voltage for source and gate drivers with minimum external components. A common voltage generation circuit is included to drive the TFT-display counter electrode. An integrated gamma control circuit is also included that can be adjusted by software commands to provide maximum flexibility and optimal display quality.

The HX8238-D is suitable for any medium-sized or small portable battery-driven product requiring long-term driving capabilities, such as Digital Still Cameras.

2. Features

- 960 x 240 graphics display a-TFT panel controller/driver for 262K colors.
- Support digital 8-bits serial/24-bits parallel RGB and CCIR601/656 input mode.
- Power supply:
  - VDD = 1.8V to 2.5V (non-regulated input for logic)
  - VDDIO = 1.8V to 3.6V (regulated input for logic)
  - VCI = 2.5V to 3.6V (power supply for internal analog circuit)
- Maximum gate driving output voltage: 30Vp-p
- Source driving output voltage: 0V to 5V
- Low current sleep mode and 8-color display mode for power saving.
- Display size: 960 x 240.
- Support Line and Frame inversion.
- Support Contrast/Brightness control
- Source and gate scan direction control.
- On-chip voltage generator.
- On-chip DC-DC converter up to 6x / -6x.
- Programmable gamma correction curve.
- Non-Volatile Memory (OTP) for VCOM calibration
- Programmable common electrode voltage amplitude and level for Cs on common structure only
- PWM function to generate power for backlight control
- COG package

Himax Confidential
For Internal Use Only
Do Not Copy

3. Block Diagram

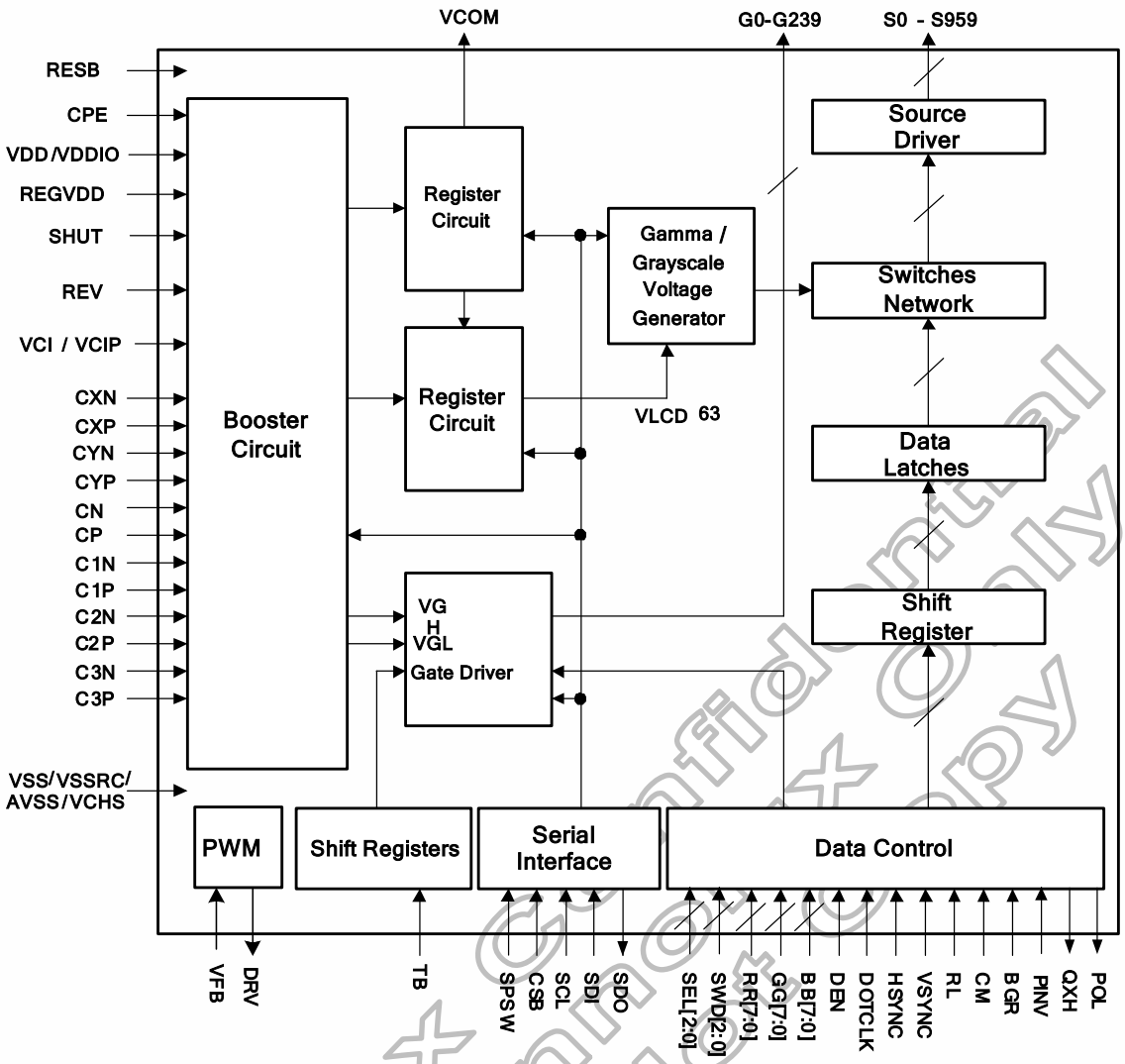

Himax Confidential
For Internal Use Only
Do Not Copy

4. PAD Assignment

DUMMY (1)
DUMMY (1)
DUMMY (1)
DUMMY (2)
G1
G3
G5
G7
G235
G237
G237
G239
DUMMY (6)
S0
S1
S2
S3
S955
S956
S957
S958
S959
DUMMY (9)
G238
G236
G234
G232
G6
G4
G2
G0
DUMMY (2)
DUMMY (1)
DUMMY (1)
DUMMY (1)

DRV (2)
VFB (2)
DUMMY (1)
VCHS (10)
VSSRC (8)
VCOM (4)
VCOMH (4)
VCOML (4)
VCOMR (2)
TEST16 (1)
TEST17 (1)
VGH (5)
C3P (3)
C3N (3)
C2P (3)
C2N (3)
VGL (5)
CP (3)
CN (3)
DUMMY (1)
VDD (6)
VCI (10)
VCIP (4)
VDDIO (6)
CXP (6)
CXN (6)
CYP (6)
CYN (6)
VCIX2 (6)
VCIX2J (6)
VLCD63 (6)
C1N (5)
C1P (5)
VCIM (5)
DUMMY (1)
PINV (1)
CPE (1)
VSS (1)
SWD2 (1)
VDDIO (1)
SWD1 (1)
VSS (1)
SWD0 (1)
VDDIO (1)
SEL2 (1)
SEL1 (1)
SEL0 (1)
VSS (1)
BGR (1)
VDDIO (1)
CM (1)
VSS (1)
RL (1)
VDDIO (1)
REGVDD (1)
VSS (1)
REV (1)
VDDIO (1)
TB (1)
VSS (1)
SHUT (2)
DOTCLK (2)
VSYNC (2)
HSYNC (2)
DEN (2)
RR7 (2)
RR6 (2)
RR5 (2)
RR4 (2)
RR3 (2)
RR2 (2)
RR1 (2)
RR0 (2)
GG7 (2)
GG6 (2)
GG5 (2)
GG4 (2)
GG3 (2)
GG2 (2)
GG1 (2)
GG0 (2)
BB7 (2)
BB6 (2)
BB5 (2)
BB4 (2)
BB3 (2)
BB2 (2)
BB1 (2)
BB0 (2)
SDI (2)
SCK (2)
CSB (2)
RESB (2)
SDO (2)
POL (1)
QXH (1)
DUMMY (1)
TEST4 (1)
TEST5 (1)
TEST6 (1)
TEST7 (1)
TEST8 (1)
TEST9 (1)
TEST10 (1)
TEST11 (1)
TEST12 (1)
TEST13 (1)
TEST14 (1)
TEST15 (1)
SPSW (1)
VSS (8)
EXVR (4)
AVSS (10)
DUMMY (1)
VCOM (4)

Himax Confidential
For Innolux Only
Do Not Copy

5. Pin Description

Name	I/O	Function	Description
CM	Input	Logic Control	Input pin to select 262k-color or 8-color display mode. After entered 8-color display mode, the driver will switch to Frame-Inversion-Mode, and only MSB of the data Red, Green and Blue will be considered. - Connect to VDDIO for 8-color display mode - Connect to VSS for 262k-color display mode
RR [7:0] GG [7:0] BB [7:0]	Input	Graphic Display Data	Graphic Data Input Pins. Internal pull low. - RR [7:0]: Red Data - 8-bits - GG [7:0]: Green Data - 8-bits - BB [7:0]: Blue Data - 8-bits For 8 bit interface, only RR[7:0] are used. For unused pins, please connect to VSS or floating.
DEN	Input	Display Timing Signals	Display enable pin from controller. Internal pull high. Connect to VDDIO or floating if not used.
VSYNC			Frame synchronization signal. Internal pull high. - Fixed to VDDIO or floating if not used.
HSYNC			Line synchronization signal. Internal pull high. - Fixed to VDDIO or floating if not used
DOTCLK			Dot-clock signal and oscillator source. A non-stop external clock must be provided to that pin even at front or black porch non-display period.
SHUT	Input	Logic Control	Display shut down pin to put the driver into sleep mode. A sharp falling edge must be provided to such pin when IC power on. Internal pull low. - Connect to VDDIO for sleep mode - Connect to VSS for normal operating mode (Refer to Power Up Sequence)
RL	Input	Panel Mapping Control	Input pin to select the Source driver data shift direction. - Connect to VDDIO for display first RGB data at S0-S2 - Connect to VSS for display first RGB data at S959-S957
TB			Input pin to select the Gate driver scan direction. - Connect to VSS for Gate scan from G239 to G0 (reverse scan) - Connect to VDDIO for Gate scan from G0 to G239 (normal scan)
BGR			Input pin to select the color mapping. - Connect to VDDIO for Blue-Green-Red mapping - Connect to VSS for Red-Green-Blue mapping (See S0-S959 pin description for details)
REV			Input pin to select the display reversion. - Connect to VDDIO mapping data '0' to maximum pixel voltage for normally white panel - Connect to VSS for mapping data '0' to minimum pixel voltage for normally black panel
SWD[2:0]			Input pin to define color filter type. References register R04h.
SEL[2:0]			Input pin to select input interface mode. References register R04h. These pins are internal pull low.
CPE			Input pin to enable internal charge pump circuit. Internal pull high. - Connect to VDDIO to enable internal charge pump VCIM, VGH, VGL, VCIX2 and VCOM. - Connect to VSS to disable internal charge pump VGH, VGL, VCIX2 and VCOM.
QXH	Output		Data sequence control pin, this pin toggle each line under delta panel.
POL			Polarity signal to monitor VCOM signal
PINV	Input	POL Control	Control the polarity of POL signal. Internal pull low. - Connect to VDDIO, POL phase is reversed with internal VCOM signal - Connect to VSS, POL phase is same with internal VCOM signal

Himax Confidential
For Internal Use Only
DO NOT COPY

Name	I/O	Function	Description
REGVDD	Input	Logic Control	Input pin to enable internal voltage regulation. -Connect to VDDIO if System Vdd > 2.5V -Connect to VSS if 2.5V ≧ System Vdd ≧ 1.8V, internal regulator will be disabled
RESB	Input	System Reset	System reset pin. Internal pull high. - Connect to VDDIO when not used (Refer to Power Up Sequence)
SPSW	Input	SPI Select	SPI table select. - Connect to VSS for Secondary SPI Register. - Connect to VDDIO for Primary SPI Register.
CSB	Input	Serial Interface	Chip select pin of serial interface. Internal pull high. - Leave it OPEN when not used (Refer to Serial Interface block)
SCK			Clock pin of serial interface. Internal pull high. - Leave it OPEN when not used (Refer to Serial Interface block)
SDI			Data input pin in serial mode. Internal pull high. - Leave it OPEN when not used (Refer to Serial Interface block)
SDO	Output		Data output pin in serial mode. - Leave it OPEN when not used (Refer to Serial Interface block)
VDDIO	Power	Power Supply for Logic Circuits	Voltage input pin for I/O logic. - Connect to system Vdd
VDD			Voltage input pin for internal logic. (a) REGVDD = VDDIO Internal regulator will be on for 3.6V ≧ System Vdd ≧ 2.5V VDD ~2V. (b) REGVDD = VSS Internal regulator will be off for 2.5V ≧ System Vdd ≧ 1.8V VDD = System Vdd
VSS	Power	Ground of the Power Supply	System ground pin of the IC. - Connect to system ground
AVSS			Grounding for analog circuit. - Connect to system ground
VSSRC			Grounding for analog circuit. This pin requires a noise free path for providing accurate LCD driving voltages. - Connect to system ground.
VCHS			Grounding for booster circuit. - Connect to system ground.
VCI	Power	Power Supply for Analog Circuits	Booster input voltage pin. - Connect to voltage source between 2.5V to 3.6V
VCIP			Voltage supply pin for analog circuit. This pin requires a noise free path for providing accurate LCD driving voltages. - Connect to same source of VCI
VCIM	Output	Booster Voltages	Negative voltage of VCI. - Connect a capacitor for stabilization
VCIX2			Equals to 2 x VCI. - Connect a capacitor for stabilization
VCIX2J	Power	Voltage for Analog	This is the power supply used by on chip analog blocks and VGH/VGL dcdc.
EXVR	Input	External Reference	External reference of internal Gamma resistor. - Connect to VSS
VCOMR			This pin provides voltage reference for internal voltage regulator when register VDV[6:0] of Power Control 3 set to “01111XX”. - Connect to an external voltage source for reference
VCOMH	Output	Voltages for VCOM Signal	This pin indicates a HIGH level of VCOM generated in driving the VCOM alternation. - Connect a capacitor for stabilization
VCOML			This pin indicates a LOW level of VCOM generated in driving the VCOM alternation. - Connect a capacitor for stabilization

Himax Confidential
For Linux Only
Do Not Copy

Name	I/O	Function	Description
VLCD63	Output	LCD Driving Voltages	Internal generated power for source driver - Connect a capacitor for stabilization
VGH			A positive power output pin for gate driver. - Connect a capacitor for stabilization
VGL			A negative power output pin for gate driver. - Connect a capacitor for stabilization
CP	Input	Booster and Stabilization Capacitors	- Connect a capacitor to CN
CXP			- Connect a capacitor to CXN
CYP			- Connect a capacitor to CYN
C1P			- Connect a capacitor to C1N
C2P			- Connect a capacitor to C2N
C3P			- Connect a capacitor to C3N
CN			- Connect a capacitor to CP
CXN			- Connect a capacitor to CXP
CYN			- Connect a capacitor to CYP
C1N			- Connect a capacitor to C1P
C2N			- Connect a capacitor to C2P
C3N			- Connect a capacitor to C3P
DRV	Output	PWM control	Power transistor gate signal for the boost converter
VFB	Input		Main boost regulator feedback input. Connect feedback resistive divider to GND. FB threshold is 0.6 V nominal
TEST4~5	Input	IC Testing Signal	Test pin of the internal circuit. Leave it connect to ground.
TEST6~17	Output	IC Testing Signal	Test pin of the internal circuit. Leave it OPEN.
VCOM	Output	LCD Driving Signals	A power supply for the TFT-display common electrode.
G0-G239			Gate driver output pins. These pins output VGH, VGL level.
S0-S959			Source driver output pins. S (3n): display Red if BGR = LOW, Blue if BGR = HIGH. S (3n+1): display Green. S (3n+2): display Blue if BGR = LOW, Red if BGR = HIGH.
DUMMY			Floating pins and no connection inside the IC. These pins can be shorted together or connect to any signal.

Himax Confidential
For Internal Only
Do Not Copy

This information contained herein is the exclusive property of Himax and shell not be distributed, reproduced, or disclosed in whole or in part without prior written permission of Himax.

6. Block Function Description

6.1 Serial Interface

The SPI is available through the chip select line (CSB), serial transfer clock line (SCK), serial data input (SDI), and serial data output (SDO).

The Driver IC recognizes the start of data transfer at the falling edge of CSB input to initiate the transfer of start byte. It recognizes the end of data transfer at the rising edge of CSB input. The Driver IC is selected when the 6-bit chip address in the start byte transferred from the transmission device and the 6-bit device identification code assigned to the Driver IC are compared and both 6-bit data correspond. The identification code must be 011100(Primary SPI Register) or 011101(Secondary SPI Register). Two different chip addresses must be assigned to the Driver IC because the seventh bit of the start byte is assigned to a register select bit (RS). When RS = 0, index register write or status read is executed. When the RS = 1, instruction write. The eighth bit of the start byte is to specify read or write (R/W bit). The data are received when the R/W bit is 0, and are transmitted when the R/W bit is 1.

After receiving the start byte, the Driver IC starts to transmit or receive data by byte. The data transmission adopts a format by which the MSB is first transmitted (9th SCK started). All Driver IC instructions consist of 16 bits and they are executed internally after two bytes are transmitted with the MSB first (IB15 to 0---9th ~24th SCK).

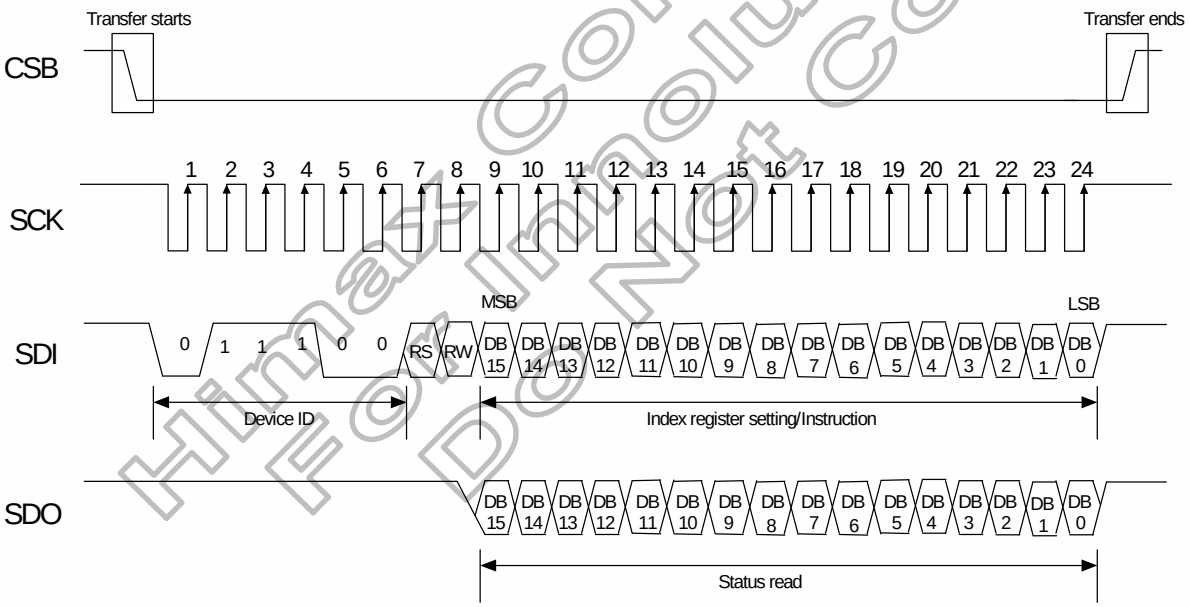

Figure 6. 1 SPI Timing

Himax Confidential
For Innolux Only
Do Not Copy

6.2 Data Control

The display data and frame position information from the controller is synchronized with the Gate Drive circuit and shift registered for the Source Driver circuit.

6.3 Gamma/Grayscale Voltage Generator

The grayscale voltage circuit generates a LCD driver circuit that corresponds to the grayscale levels as specified in the grayscale gamma-adjusting resistor. 262K possible colors can be displayed.

6.4 Boost and Regulator Circuit

These two functional blocks generate the voltage of VGH, VGL, VCOMH, VCOML and VLCD63, which are necessary for operating a TFT LCD.

6.5 PWM Boost Converter

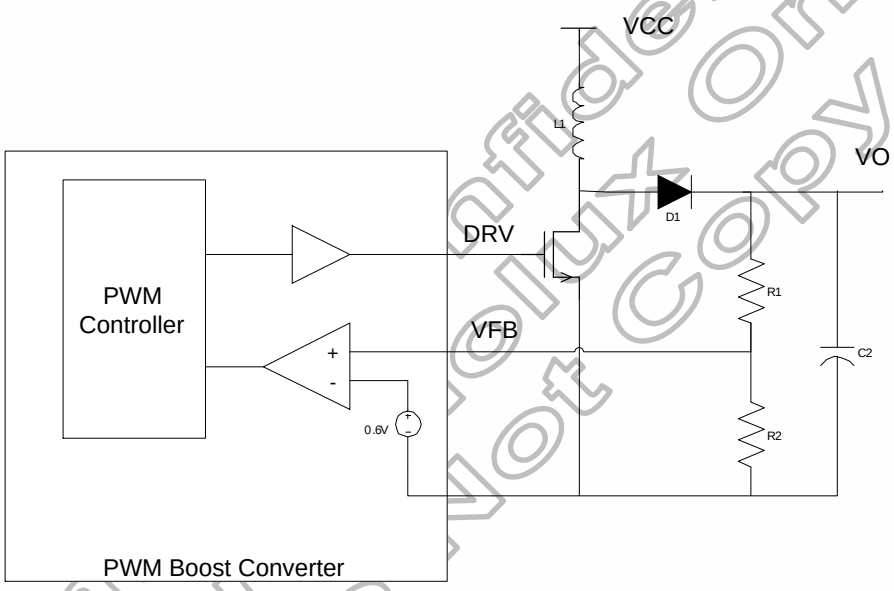

Figure 6. 2

When set PWMS=0, internal PWM function is enabled. The internal reference voltage is adjustable by FB[2:0] in R05h. By adjusting the voltage, you can get different VO to meet your system application.

When set PWMS=1, HX8238D will send the enable signal from DRV pin to control external LED driver. The enable control signal can be adjusted the duty cycle by DUTY[7:0] in R08h, the duty cycle range is from 1/256 to 256/256. And it also can be adjustable the frequency by PWMF[3:0] in R08h, the frequency range is from 100Hz to 100 KHz.

Himax Confidential
For Colux Only
Do Not Copy

6.6 Shift Register

The shift registers control the direction of line scanning of source.

6.7 Data Latches

This block is a series of latches carrying the display signal information. These latches hold the data, which will be fed to the Source Driver to output the required voltage level.

6.8 Aging Mode

If only DOTCLK is sent into driver IC without VSYNC, HSYNC, and DEN signals, HX8238-D will enter Aging Mode after power on. In Aging Mode, the display will show Black, White, Red, Green, and Blue images in series automatically.

6.9 Reset Circuit

This block is integrated into the Interface Logic which includes Power on Reset circuitry and the hardware reset pin, /RES. Both of these having the same reset function. Once the /RES pin receives a negative reset pulse, all internal circuitry will start to initialize. The minimum pulse width for completing the reset sequence is 10us. The status of the chip after reset is given by:

Himax Confidential
For Innolux Only
Do Not Copy

This information contained herein is the exclusive property of Himax and shell not be distributed, reproduced, or disclosed in whole or in part without prior written permission of Himax.

7 3-Wire Serial Port Interface

7.1 Primary Register Command Table

Reg#	Register	R/W	R/S	IB15	IB14	IB13	IB12	IB11	IB10	IB9	IB8	IB7	IB6	IB5	IB4	IB3	IB2	IB1	IB0
SR	Status Read	1	0	L7	L6	L5	L4	L3	L2	L1	L0	0	0	0	0	0	0	0	0
R01h	Driver output control	0	1	0	RL	REV	PINV	BGR	SM	TB	CPE	0	0	0	0	0	0	0	0
R02h	LCD driver AC control	0	1	0	0	0	0	0	0	B/C	0	0	0	0	0	0	0	0	0
R03h	Power control (1)	0	1	DCT3	DCT2	DCT1	DCT0	BTF	BT2	BT1	BT0	DC3	DC2	DC1	DC0	AP2	AP1	AP0	0
R04h	Data and color filter control	0	1	0	0	0	0	0	PALM	BLT1	BLT0	0	0	SEL2	SEL1	SEL0	SWD2	SWD1	SWD0
R06h	Reserved	Reserved																	
R08h	LED control	0	1	0	0	0	PWMS	PWMF3	PWMF2	PWMF1	PWMF0	DUTY7	DUTY6	DUTY5	DUTY4	DUTY3	DUTY2	DUTY1	DUTY0
R0Ah	Contrast/ Brightness control	0	1	0	BR6	BR5	BR4	BR3	BR2	BR1	BR0	0	0	0	CON4	CON3	CON2	CON1	CON0
R0Dh	Power control (2)	0	1	0	VRC2	VRC1	VRC0	0	0	VDS1	VDS0	0	0	VRH5	VRH4	VRH3	VRH2	VRH1	VRH0
R0Eh	Power control (3)	0	1	0	0	1	VDV6	VDV5	VDV4	VDV3	VDV2	VDV1	VDV0	0	0	0	0	0	0
R0Fh	Gate scan starting Position	0	1	0	0	0	0	0	0	0	0	SCN7	SCN6	SCN5	SCN4	SCN3	SCN2	SCN1	SCN0
R16h	Horizontal Porch	0	1	XLIM8	XLIM7	XLIM6	XLIM5	XLIM4	XLIM3	XLIM2	XLIM1	XLIM0	0	0	0	0	0	0	0
R17h	Vertical Porch	0	1	STH1	STH0	HBP6	HBP5	HBP4	HBP3	HBP2	HBP1	HBP0	VBP6	VBP5	VBP4	VBP3	VBP2	VBP1	VBP0
R1Eh	Power control (4)	0	1	0	0	0	0	0	0	0	0	nOTP	VCM6	VCM5	VCM4	VCM3	VCM2	VCM1	VCM0
R27h	Reserved	Reserved																	
R28h	Reserved	Reserved																	
R29h	Reserved	Reserved																	
R2Bh	Reserved	Reserved																	
R30h	γ control (1)	0	1	0	0	0	0	0	PKP 12	PKP 11	PKP 10	0	0	0	0	0	PKP 02	PKP 01	PKP 00
R31h	γ control (2)	0	1	0	0	0	0	0	PKP 32	PKP 31	PKP 30	0	0	0	0	0	PKP 22	PKP 21	PKP 20
R32h	γ control (3)	0	1	0	0	0	0	0	PKP 52	PKP 51	PKP 50	0	0	0	0	0	PKP 42	PKP 41	PKP 40
R33h	γ control (4)	0	1	0	0	0	0	0	PRP 12	PRP 11	PRP 10	0	0	0	0	0	PRP 02	PRP 01	PRP 00
R34h	γ control (5)	0	1	0	0	0	0	0	PKN 12	PKN 11	PKN 10	0	0	0	0	0	PKN 02	PKN 01	PKN 00
R35h	γ control (6)	0	1	0	0	0	0	0	PKN 32	PKN 31	PKN 30	0	0	0	0	0	PKN 22	PKN 21	PKN 20
R36h	γ control (7)	0	1	0	0	0	0	0	PKN 52	PKN 51	PKN 50	0	0	0	0	0	PKN 42	PKN 41	PKN 40
R37h	γ control (8)	0	1	0	0	0	0	0	PRN 12	PRN 11	PRN 10	0	0	0	0	0	PRN 02	PRN 01	PRN 00
R3Ah	γ control (9)	0	1	0	0	0	VRP 14	VRP 13	VRP 12	VRP 11	VRP 10	0	0	0	0	VRP 03	VRP 02	VRP 01	VRP 00
R3Bh	γ control (10)	0	1	0	0	0	VRN 14	VRN 13	VRN 12	VRN 11	VRN 10	0	0	0	0	VRN 03	VRN 02	VRN 01	VRN 00

Note: * means don't care
Software settings will override hardware pin (eg, BGR bits override BGR pin definition)

Table 7. 1 Command Table (Primary Register Map)

Himax Confidential
For Internal Use Only
Do Not Copy

7.2 Primary Register Default Value

Reg#	Hex Code	Register Bit Value
R01h	XX00	RL=X, REV=X, PINV=X, BGR=X, SM="0", TB=X, CPE=X
R02h	0200	B/C="1"
R03h	6464	DCT="0110", BT="100", BTF="0", DC="0110", AP="010"
R04h	04XX	PALM="1", BLT="00", SEL= X, SWD=X
R08h	06FF	PWMS="0", PWMF="0110", DUTY="11111111"
R0Ah	4008	BR="1000000", CON="01000"
R0Dh	3229	VRC="011", VDS="10", VRH="101001"
R0Eh	1200	VDV="1001000"
R0Fh	0000	SCN="00000000"
R16h	9F80	XLIM="100111111"
R17h		STH="00", HBP=**Note**(2), VBP=**Note**(2)
R1Eh	005F	nOTP="0", VCM="1011111"
R30h	0000	PKP1="000", PKP0="000"
R31h	0407	PKP3="100", PKP2="111"
R32h	0202	PKP5="010", PKP4="010"
R33h	0000	PRP1="000", PRP0="000"
R34h	0505	PKN1="101", PKN0="101"
R35h	0003	PKN3="000", PKN2="011"
R36h	0707	PKN5="111", PKN4="111"
R37h	0000	PRN1="000", PRN0="000"
R3Ah	0904	VRP1="01001", VRP0="0100"
R3Bh	0904	VRN1="01001", VRN0="0100"

Note: (1) X means the bit is refer to the logic stage of the corresponding hardware pin
(2) The default values of the VSP、HBP、VBP are automatically set by SEL

Default Value auto setting			VSP	HBP[6:0]	VBP[6:0]
SEL[2:0] = 000	NTSC		0	1000100	0010010
	PAL	PALM=0	0	1000100	0010010
		PALM=1			0010010
SEL[2:0] = 001	NTSC		0	1000100	0010010
	PAL	PALM=0	0	1000100	0010010
		PALM=1			0010010
SEL[2:0] = 010	NTSC		0	1000101	0010110
	PAL	PALM=0	0	1000101	0011100
		PALM=1			0011000
SEL[2:0] = 011	NTSC		0	1000100	0010110
	PAL	PALM=0	0	1000111	0011100
		PALM=1			0011000
SEL[2:0] = 100	NTSC		1	1000110	0010001
	PAL	PALM=0	1	1000110	0011000
		PALM=1			0010100
SEL[2:0] = 101	NTSC		1	1000101	0010001
	PAL	PALM=0	1	1001000	0011000
		PALM=1			0010100
SEL[2:0] = 110	NTSC		1	1000101	0010001
	PAL	PALM=0	1	1001000	0011000
		PALM=1			0010100
SEL[2:0] = 111	NTSC		1	1000110	0010001
	PAL	PALM=0	1	1000110	0011000
		PALM=1			0010100

Table 7. 2 Registers Default Value(Primary Register Map)

Confidential
For Quiz Only
Copy

7.3 Primary Register Command Description

Status Read

R/W	RS	IB15	IB14	IB13	IB12	IB11	IB10	IB9	IB8	IB7	IB6	IB5	IB4	IB3	IB2	IB1	IB0
R	0	L7	L6	L5	L4	L3	L2	L1	L0	0	0	0	0	0	0	0	0

Figure 7. 1 Status Read

The status read instruction reads the internal status of the HX8238-D.

L7–0: Indicate the driving raster-row position where the liquid crystal display is being driven.

Driver Output Control (R01h)

R/W	RS	IB15	IB14	IB13	IB12	IB11	IB10	IB9	IB8	IB7	IB6	IB5	IB4	IB3	IB2	IB1	IB0
W	1	0	R L	REV	PINV	BGR	S M	T B	CPE	0	0	0	0	0	0	0	0

Figure 7. 2 Driver Output Control

CPE: When CPE=0, Vcim is not shut down, but VGH, VGL, VCOM and Vcix2 are shut down. When CPE=1, internal charge pump Vcim, VGH, VGL, VCOM and Vcix2 are enabled.

REV: Displays all character and graphics display sections with reversal when REV="0". Since the grayscale level can be reversed, display of the same data is enabled on normally white and normally black panels. Source output level is indicated below.

REV	RGB data	Source output level	
		VCOM = "L"	VCOM = "H"
1	00000H : 3FFFFH	V0 : V63	V63 : V0
0	00000H : 3FFFFH	V63 : V0	V0 : V63

Table 7. 3 Source Output Level

PINV: When PINV=0, POL output is same phase with internal VCOM signal. When PINV=1, POL output phase is reversed with VCOM signal.

BGR: Selects the <R><G><B> arrangement. When BGR="0" <R><G><B> color is assigned from S0.When BGR="1" <B><G><R> color is assigned from S0.

SM: Change the division of gate driver. When SM = "0", odd/even division (interlace mode) is selected. When SM="1", upper/lower division is selected. Select the division mode according to the mounting method.

TB: Selects the output shift direction of the gate driver. When TB="1", G0 shifts to G239. When TB = "0", G239 shifts to G0.

RL: Selects the output shift direction of the source driver. When RL="1", S0 shifts to S959 and <R><G><B> color is assigned from S0. When RL="0", S959 shifts to S0 and <R><G><B> color is assigned from S959. Set RL bit and BGR bit when changing the dot order of R, G and B.

Note: The default setting of register bits **REV**, **BGR**, **TB** and **RL** are defined by the logic stage of corresponding hardware pins. These bits will override the hardware setting once software command was sent to set the bits.

Himax Confidential
For Internal Use Only
Do Not Copy

This information contained herein is the exclusive property of Himax and shell not be distributed, reproduced, or disclosed in whole or in part without prior written permission of Himax.

	SM = 0	SM = 1
TB = 1 RL = 1	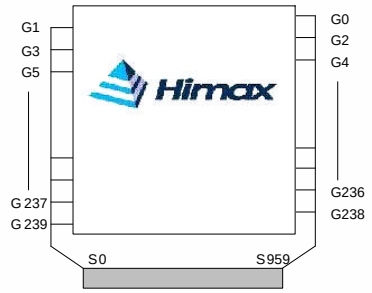	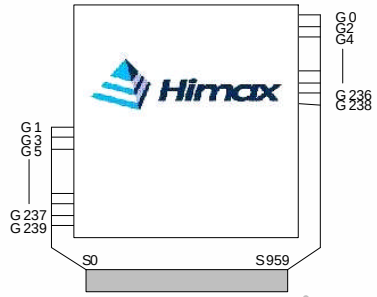
TB = 0 RL = 1	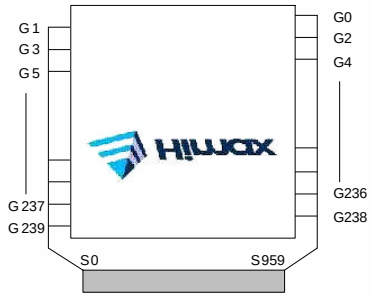	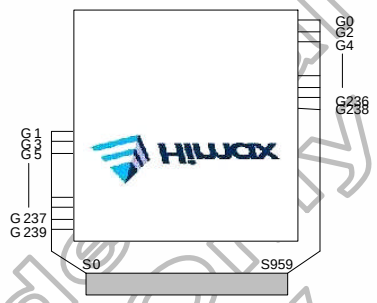
TB = 1 RL = 0	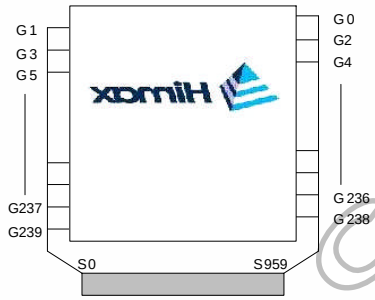	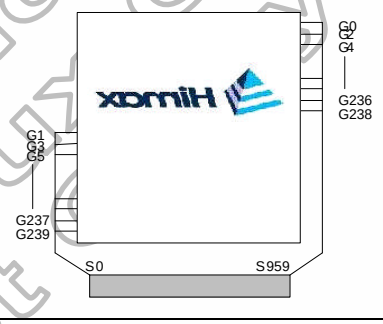
TB = 0 RL = 0	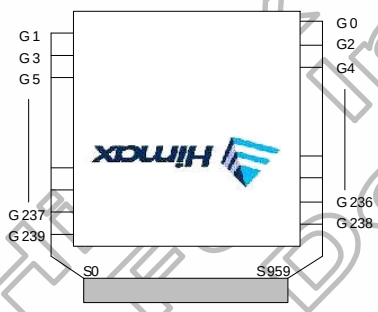	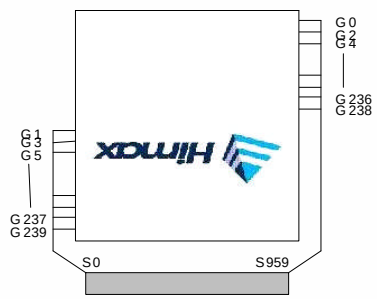

Figure 7. 3 Scan Direction & Display

Himax Confidential
Innolux Only
Do Not Copy

LCD-Driving-Waveform Control (R02h)

R/W	RS	IB15	IB14	IB13	IB12	IB11	IB10	IB9	IB8	IB7	IB6	IB5	IB4	IB3	IB2	IB1	IB0
W	1	0	0	0	0	0	0	B/C	0	0	0	0	0	0	0	0	0

Figure 7. 4 LCD-Driving-Waveform Control

B/C: When B/C = 0, frame inversion of the LCD driving signal is enabled. When B/C = 1, line inversion waveform is generated

Power control 1 (R03h)

R/W	RS	IB15	IB14	IB13	IB12	IB11	IB10	IB9	IB8	IB7	IB6	IB5	IB4	IB3	IB2	IB1	IB0
W	1	DCT3	DCT2	DCT1	DCT0	BTF	BT2	BT1	BT0	DC3	DC2	DC1	DC0	AP2	AP1	AP0	0

Figure 7. 5 Power Control 1

DCT3-0: Set the step-up cycle of the step-up circuit for 8-color mode (CM = VDDIO). When the cycle is accelerated, the Vcim and Vcix2 driving ability of the step-up circuit increase, but their current consumption increase, too. Adjust the cycle taking into account the display quality and power consumption. VGH and VGL are always fixed at the step-up cycle of Fline x 0.5.

DCT3	DCT2	DCT1	DCT0	Step-up cycle
0	0	0	0	Fline x 14
0	0	0	1	Fline x 12
0	0	1	0	Fline x 10
0	0	1	1	Fline x 8
0	1	0	0	Fline x 7
0	1	0	1	Fline x 6
0	1	1	0	Fline x 5
0	1	1	1	Fline x 4
1	0	0	0	Fline x 3
1	0	0	1	Fline x 2
1	0	1	0	Fline x 1
1	0	1	1	Fline x 0.5
1	1	0	0	Fline x 0.25
1	1	0	1	Reserved
1	1	1	0	Reserved
1	1	1	1	Reserved

* Fline = horizontal frequency (Fline Typ. 15KHz)

Table 7. 4 Step-up Cycle

BT2-0 & BTF: Control the step-up factor of the step-up circuit. Adjust the step-up factor according to the power supply voltage to be used.

BTF	BT2	BT1	BT0	VGH output	VGL output
0	0	0	0	V_{CIX2j} X 3	- (V_{CIX2j} X 3) + V_{CI}
0	0	0	1	V_{CIX2j} X 3	- (V_{CIX2j} X 2)
0	0	1	0	V_{CIX2j} X 3	- (V_{CIX2j} X 3)
0	0	1	1	V_{CIX2j} X 2 + V_{CI}	- (V_{CIX2j} X 2) - V_{CI}
0	1	0	0	V_{CIX2j} X 2 + V_{CI}	- (V_{CIX2j} X 2)
0	1	0	1	V_{CIX2j} X 2 + V_{CI}	- (V_{CIX2j} X 2) + V_{CI}
0	1	1	0	V_{CIX2j} X 2	- (V_{CIX2j} X 2)
0	1	1	1	V_{CIX2j} X 2	- (V_{CIX2j} X 2) + V_{CI}
1	X	X	X	V_{CIX2j} X 3	- V_{CIX2j}

Table 7. 5 VGH and VGL Booster Ratio

Himax Confidential
For Internal Use Only
Do Not Copy

This information contained herein is the exclusive property of Himax and shell not be distributed, reproduced, or disclosed in whole or in part without prior written permission of Himax.

DC3-0: Set the step-up cycle of the step-up circuit for 262k-color mode (CM=VSS). When the cycle is accelerated, the Vcim and Vcix2 driving ability of the step-up circuit increase, but their current consumption increase, too. Adjust the cycle taking into account the display quality and power consumption. VGH and VGL are always fixed at the step-up cycle of Fline x 0.5.

DC3	DC2	DC1	DC0	Step-up cycle
0	0	0	0	Fline x 14
0	0	0	1	Fline x 12
0	0	1	0	Fline x 10
0	0	1	1	Fline x 8
0	1	0	0	Fline x 7
0	1	0	1	Fline x 6
0	1	1	0	Fline x 5
0	1	1	1	Fline x 4
1	0	0	0	Fline x 3
1	0	0	1	Fline x 2
1	0	1	0	Fline x 1
1	0	1	1	Fline x 0.5
1	1	0	0	Fline x 0.25
1	1	0	1	Reserved
1	1	1	0	Reserved
1	1	1	1	Reserved

Note: Fline = horizontal frequency (Fline Typ. 15KHz)

Table 7. 6 Step-up Cycle

AP2-0: Adjust the amount of current from the stable-current source in the internal operational amplifier circuit. When the amount of current becomes large, the driving ability of the operational-amplifier circuits increase. Adjust the current taking into account the power consumption. During times when there is no display, such as when the system is in a sleep mode, set AP2-0 = “000” to halt the operational amplifier circuit and the step-up circuits to reduce current consumption.

AP2	AP1	AP0	Op-amp power
0	0	0	Least
0	0	1	Small
0	1	0	Small to medium
0	1	1	Medium
1	0	0	Medium to large
1	0	1	Large
1	1	0	Large to Maximum
1	1	1	Maximum

Table 7. 7 Op-amp Power

Himax Confidential
For Internal Only
Do Not Copy

Input Data and Color Filter Control (R04h)

R/W	RS	IB15	IB14	IB13	IB12	IB11	IB10	IB9	IB8	IB7	IB6	IB5	IB4	IB3	IB2	IB1	IB0
W	1	0	0	0	0	0	PALM	BLT1	BLT0	0	0	SEL2	SEL1	SEL0	SWD2	SWD1	SWD0

Figure 7. 6 Input Data and Color Filter Control

SWD2-0: Control and switch the relationship between the R, G, B data and color filter type.

This information contained herein is the exclusive property of Himax and shell not be distributed, reproduced, or disclosed in whole or in part without prior written permission of Himax.

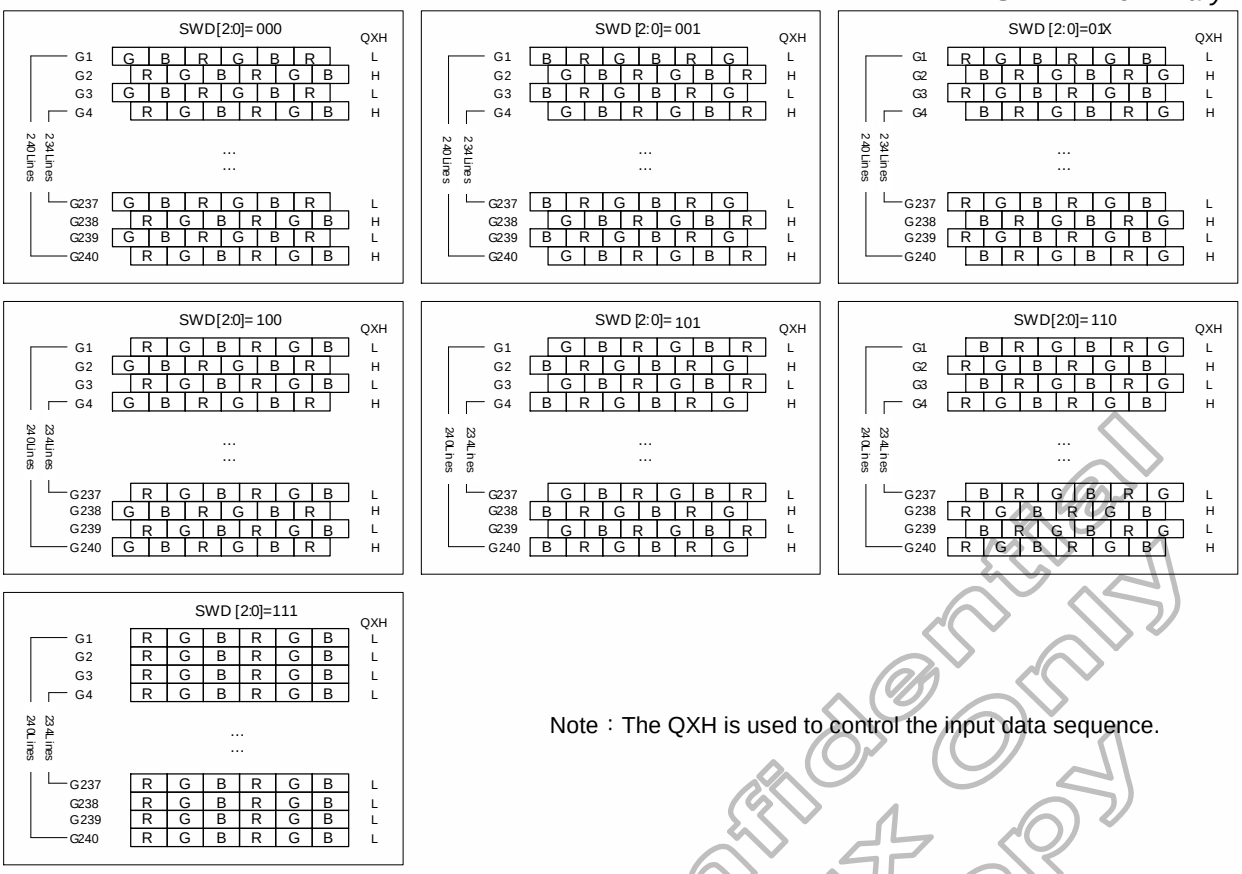

Note：The QXH is used to control the input data sequence.

Table 7. 8 Color Filter Type

SEL2-0: Define the input interface mode.

SEL2	SEL1	SEL0	Format	Operating Frequency
0	0	0	Parallel-RGB data format (only support stripe type color filter)	6.5MHz
0	0	1	Serial-RGB data format	19.5MHz
0	1	0	CCIR 656 data format (640RGB)	24.54MHz
0	1	1	CCIR 656 data format (720RGB)	27MHz
1	0	0	YUV mode A data format (Cr-Y-Cb-Y)	24.54MHz
1	0	1	YUV mode A data format (Cr-Y-Cb-Y)	27MHz
1	1	0	YUV mode B data format (Cb-Y-Cr-Y)	27MHz
1	1	1	YUV mode B data format (Cb-Y-Cr-Y)	24.54MHz

Input format	DOTCLK Freq (MHz)	Display Data	Active Area (DOTCLK)
YUV mode	24.54	640	1280
	27	720	1440

Table 7. 9 Interface Type

Himax Confidential
For Internal Use Only
Do Not Copy

BLT[1:0]: Set the initial power on black image insertion time.
00: 10 fields
01: 20 fields
10: 40 fields
11: 80 fields

PALM: Set the input data line number in PAL mode
0: 280 lines
1: 288 lines

PWM Control (R08h)

R/W	RS	IB15	IB14	IB13	IB12	IB11	IB10	IB9	IB8	IB7	IB6	IB5	IB4	IB3	IB2	IB1	IB0
W	1	0	0	0	PWMS	PWMF3	PWMF2	PWMF1	PWMF0	DUTY7	DUTY6	DUTY5	DUTY4	DUTY3	DUTY2	DUTY1	DUTY0

Figure 7. 7 PWM for External LED driver Control

PWMS: Select PWM function.
When PWMS=0, use internal PWM circuit. (Default)
When PWMS=1, use external LED driver, DRV pin outputs control signal.
PWMF3-0: Select control signal frequency when set PWMS=1. Adjust range from 100Hz to 100KHz. Default value = 0110.

PWMF3	PWMF2	PWMF1	PWMF0	Enable signal frequency		
				Parallel RGB 6.5MHz	Serial RGB 19.5MHz	YUV/CCIR656 24.54/27MHz
0	0	0	0	DCLK / 2^8	DCLK / 3 / 2^8	DCLK / 2^8
0	0	0	1	DCLK / 2^8	DCLK / 3 / 2^8	DCLK / 2^9
0	0	1	0	DCLK / 2^8	DCLK / 3 / 2^8	DCLK / 2^{10}
0	0	1	1	DCLK / 2^9	DCLK / 3 / 2^9	DCLK / 2^{11}
0	1	0	0	DCLK / 2^{10}	DCLK / 3 / 2^{10}	DCLK / 2^{12}
0	1	0	1	DCLK / 2^{11}	DCLK / 3 / 2^{11}	DCLK / 2^{13}
0	1	1	0	DCLK / 2^{12}	DCLK / 3 / 2^{12}	DCLK / 2^{14}
0	1	1	1	DCLK / 2^{13}	DCLK / 3 /2^{13}	DCLK / 2^{15}
1	0	0	0	DCLK / 2^{14}	DCLK / 3 / 2^{14}	DCLK / 2^{16}
1	0	0	1	DCLK / 2^{15}	DCLK / 3 / 2^{15}	DCLK / 2^{17}
1	0	1	0	DCLK / 2^{16}	DCLK / 3 / 2^{16}	DCLK / 2^{18}
1	0	1	1	Reserved	Reserved	Reserved
1	1	0	0	Reserved	Reserved	Reserved
1	1	0	1	Reserved	Reserved	Reserved
1	1	1	0	Reserved	Reserved	Reserved
1	1	1	1	Reserved	Reserved	Reserved

Table 7. 10 LED Driver Control Signal Frequency

DUTY7-0: Select control signal duty cycle when set PWMS=1. Adjust range from 00h(duty cycle=1/256) to FFh(duty cycle=256/256). Default value is FFh.

Himax Confidential
For Internal Use Only
Do not copy

This information contained herein is the exclusive property of Himax and shell not be distributed, reproduced, or disclosed in whole or in part without prior written permission of Himax.

Contrast/Brightness Control (R0Ah)

R/W	RS	IB15	IB14	IB13	IB12	IB11	IB10	IB9	IB8	IB7	IB6	IB5	IB4	IB3	IB2	IB1	IB0
W	1	0	BR6	BR5	BR4	BR3	BR2	BR1	BR0	0	0	0	CON4	CON3	CON2	CON1	CON0

Figure 7. 8 Contrast/Brightness Control

CON4-0: Display Contrast level adjustment. (0.125/step) Adjust range from 00h (level=0) to 1Fh (level=3.875). Default value is 08h (level=1).

BR6-0: Display Brightness level adjustment. (2/step) Adjust range from 00h (level=-128) to 7Fh(level=+126). Default value is 40h(level=0).

Power Control 2 (R0Dh)

R/W	RS	IB15	IB14	IB13	IB12	IB11	IB10	IB9	IB8	IB7	IB6	IB5	IB4	IB3	IB2	IB1	IB0
W	1	0	VRC2	VRC1	VRC0	0	0	VDS1	VDS0	0	0	VRH5	VRH4	VRH3	VRH2	VRH1	VRH0

Figure 7. 9 Power Control 2

VRC[2:0]: Set the VCIX2 charge pump voltage clamp.

VRC[2:0]=000, 5.1V
VRC[2:0]=001, 5.3V
VRC[2:0]=010, 5.5V
VRC[2:0]=011, 5.7V
VRC[2:0]=100, 5.9V
VRC[2:0]=101, reserved
VRC[2:0]=110, reserved
VRC[2:0]=111, reserved

VDS[1:0]: Set the VDD regulator voltage if pin “REGVDD” is set to VDDIO.

VDS[1:0]=00, 1.8V
VDS[1:0]=01, 2V
VDS[1:0]=10, 2.2V
VDS[1:0]=11, 2.5V

VRH5-0: Set amplitude magnification of VLCD63. These bits amplify the VLCD63 voltage 2.464 to 4.456 times the Vref voltage set by VRH5-0.

Himax Confidential
For Innolux Only
Do Not Copy

VRH5	VRH4	VRH3	VRH2	VRH1	VRH0	VLCD63Voltage
0	0	0	0	0	0	Vref x 2.456
0	0	0	0	0	1	Vref x 2.488
0	0	0	0	1	0	Vref x 2.520
0	0	0	0	1	1	Vref x 2.552
0	0	0	1	0	0	Vref x 2.584
0	0	0	1	0	1	Vref x 2.616
0	0	0	1	1	0	Vref x 2.648
0	0	0	1	1	1	Vref x 2.680
0	0	1	0	0	0	Vref x 2.712
0	0	1	0	0	1	Vref x 2.744
0	0	1	0	1	0	Vref x 2.776
0	0	1	0	1	1	Vref x 2.808
0	0	1	1	0	0	Vref x 2.840
0	0	1	1	0	1	Vref x 2.872
0	0	1	1	1	0	Vref x 2.904
0	0	1	1	1	1	Vref x 2.936
0	1	0	0	0	0	Vref x 2.968
0	1	0	0	0	1	Vref x 3.000
0	1	0	0	1	0	Vref x 3.032
0	1	0	0	1	1	Vref x 3.064
0	1	0	1	0	0	Vref x 3.096
0	1	0	1	0	1	Vref x 3.128
0	1	0	1	1	0	Vref x 3.160
0	1	0	1	1	1	Vref x 3.192
0	1	1	0	0	0	Vref x 3.224
0	1	1	0	0	1	Vref x 3.256
0	1	1	0	1	0	Vref x 3.288
0	1	1	0	1	1	Vref x 3.320
0	1	1	1	0	0	Vref x 3.352
0	1	1	1	0	1	Vref x 3.384
0	1	1	1	1	0	Vref x 3.416
0	1	1	1	1	1	Vref x 3.448

VRH5	VRH4	VRH3	VRH2	VRH1	VRH0	VLCD63Voltage
1	0	0	0	0	0	Vref x 3.480
1	0	0	0	0	1	Vref x 3.512
1	0	0	0	1	0	Vref x 3.544
1	0	0	0	1	1	Vref x 3.576
1	0	0	1	0	0	Vref x 3.608
1	0	0	1	0	1	Vref x 3.640
1	0	0	1	1	0	Vref x 3.672
1	0	0	1	1	1	Vref x 3.704
1	0	1	0	0	0	Vref x 3.736
1	0	1	0	0	1	Vref x 3.768
1	0	1	0	1	0	Vref x 3.800
1	0	1	0	1	1	Vref x 3.832
1	0	1	1	0	0	Vref x 3.864
1	0	1	1	0	1	Vref x 3.896
1	0	1	1	1	0	Vref x 3.928
1	0	1	1	1	1	Vref x 3.960
1	1	0	0	0	0	Vref x 3.992
1	1	0	0	0	1	Vref x 4.024
1	1	0	0	1	0	Vref x 4.056
1	1	0	0	1	1	Vref x 4.088
1	1	0	1	0	0	Vref x 4.120
1	1	0	1	0	1	Vref x 4.152
1	1	0	1	1	0	Vref x 4.184
1	1	0	1	1	1	Vref x 4.216
1	1	1	0	0	0	Vref x 4.248
1	1	1	0	0	1	Vref x 4.280
1	1	1	0	1	0	Vref x 4.312
1	1	1	0	1	1	Vref x 4.344
1	1	1	1	0	0	Vref x 4.376
1	1	1	1	0	1	Vref x 4.408
1	1	1	1	1	0	Vref x 4.440
1	1	1	1	1	1	Vref x 4.472

Note: Vref is the internal reference voltage equals to 1.25V.

Table 7. 11 VLCD63 Voltage

Himax Confidential
For Internal Use Only
Do Not Copy

Power Control 3 (R0Eh)

R/W	RS	IB15	IB14	IB13	IB12	IB11	IB10	IB9	IB8	IB7	IB6	IB5	IB4	IB3	IB2	IB1	IB0
W	1	0	0	0	VDV6	VDV5	VDV4	VDV3	VDV2	VDV1	VDV0	0	0	0	0	0	0

Figure 7. 10 Power Control 3

VDV6-0: Set the alternating amplitudes of VCOM at the VCOM alternating drive. These bits amplify VCOM amplitude 0.6 to 1.2525 times the VLCD63 voltage. External voltage at VCOMR is referenced when VDV="01111xx".

VDV6	VDV5	VDV4	VDV3	VDV2	VDV1	VDV0	VCOM Amplitude
0	0	0	0	0	0	0	VLCD63 x 0.6000
0	0	0	0	0	0	1	VLCD63 x 0.6075
0	0	0	0	0	1	0	VLCD63 x 0.6150
0	0	0	0	0	1	1	VLCD63 x 0.6225
0	0	0	0	1	0	0	VLCD63 x 0.6300
			:				: Step = 0.0075 :
0	1	1	1	0	1	0	VLCD63 x 1.0350
0	1	1	1	0	1	1	VLCD63 x 1.0425
0	1	1	1	1	*	*	Reference from external voltage (VCOMR)
1	0	0	0	0	0	0	VLCD63 x 1.0500
1	0	0	0	0	0	1	VLCD63 x 1.0575
			:				: Step = 0.0075 :
1	0	1	1	0	1	0	VLCD63 x 1.2450
1	0	1	1	0	1	1	VLCD63 x 1.2525
1	0	1	1	1	*	*	Reserved
1	1	*	*	*	*	*	Reserved

Table 7. 12 VCOM Amplitude

Gate Scan Position (R0Fh)

R/W	RS	IB15	IB14	IB13	IB12	IB11	IB10	IB9	IB8	IB7	IB6	IB5	IB4	IB3	IB2	IB1	IB0
W	1	0	0	0	0	0	0	0	0	SCN7	SCN6	SCN5	SCN4	SCN3	SCN2	SCN1	SCN0

Figure 7. 11 Gate Scan Position

SCN8-0: Set the scanning starting position of the gate driver.

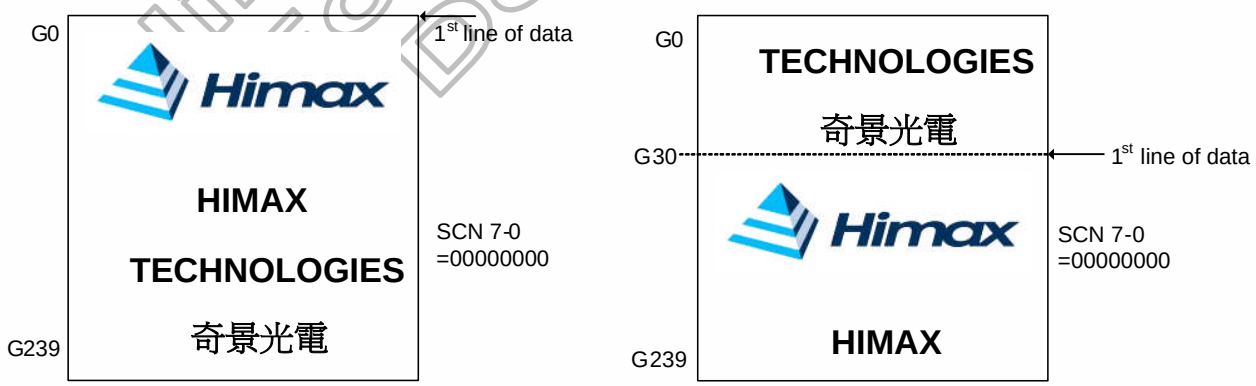

Figure 7. 12 Gate Scan Display Position

Himax Confidential
For Innolux Only
Do Not Copy

Horizontal Porch (R16h)

R/W	RS	IB15	IB14	IB13	IB12	IB11	IB10	IB9	IB8	IB7	IB6	IB5	IB4	IB3	IB2	IB1	IB0
W	1	XLIM8	XLIM7	XLIM6	XLIM5	XLIM4	XLIM3	XLIM2	XLIM1	XLIM0	0	0	0	0	0	0	0

Figure 7. 13 Horizontal Porch

XLIM8-0: Set the number of valid pixel per line.

XLIM8	XLIM7	XLIM6	XLIM5	XLIM4	XLIM3	XLIM2	XLIM1	XLIM0	No. of pixel per line
0	0	0	0	0	0	0	0	0	1
0	0	0	0	0	0	0	0	1	2
0	0	0	0	0	0	0	1	0	3
				:					:
				:					Step = 1
				:					:
1	0	0	1	1	1	1	1	0	319
1	0	0	1	1	1	1	1	1	320
1	0	1	*	*	*	*	*	*	Reserved
1	1	*	*	*	*	*	*	*	Reserved

Table 7. 13 No. of Pixel Per Line

Himax Confidential
For Innolux Only
Do Not Copy

Vertical Porch (R17h)

R/W	RS	IB15	IB14	IB13	IB12	IB11	IB10	IB9	IB8	IB7	IB6	IB5	IB4	IB3	IB2	IB1	IB0
W	1	STH1	STH0	HBP6	HBP5	HBP4	HBP3	HBP2	HBP1	HBP0	VBP6	VBP5	VBP4	VBP3	VBP2	VBP1	VBP0

Figure 7. 14 Vertical Porch

HBP6-0: Set the delay period from falling edge of HSYNC signal to first valid data. The pixel data exceed the range set by XLIM8-0 and before the first valid data will be treated as dummy data. The setting is only effective in SYNC mode timing.

HBP6	HBP5	HBP4	HBP3	HBP2	HBP1	HBP0	No. of Clock Cycle
0	0	0	0	0	0	0	Can't set
0	0	0	0	0	0	1	Can't set
0	0	0	0	0	1	0	Can't set
0	0	0	0	0	1	1	Can't set
0	0	0	0	1	0	0	Can't set
0	0	0	0	1	0	1	Can't set
0	0	0	0	1	1	0	Can't set
0	0	0	0	1	1	1	Can't set
0	0	0	1	0	0	0	Can't set
0	0	0	1	0	0	1	9
							: Step = 1 :
1	1	1	1	1	1	0	126
1	1	1	1	1	1	1	127

Table 7. 14 No. of Clock Cycle of Clock

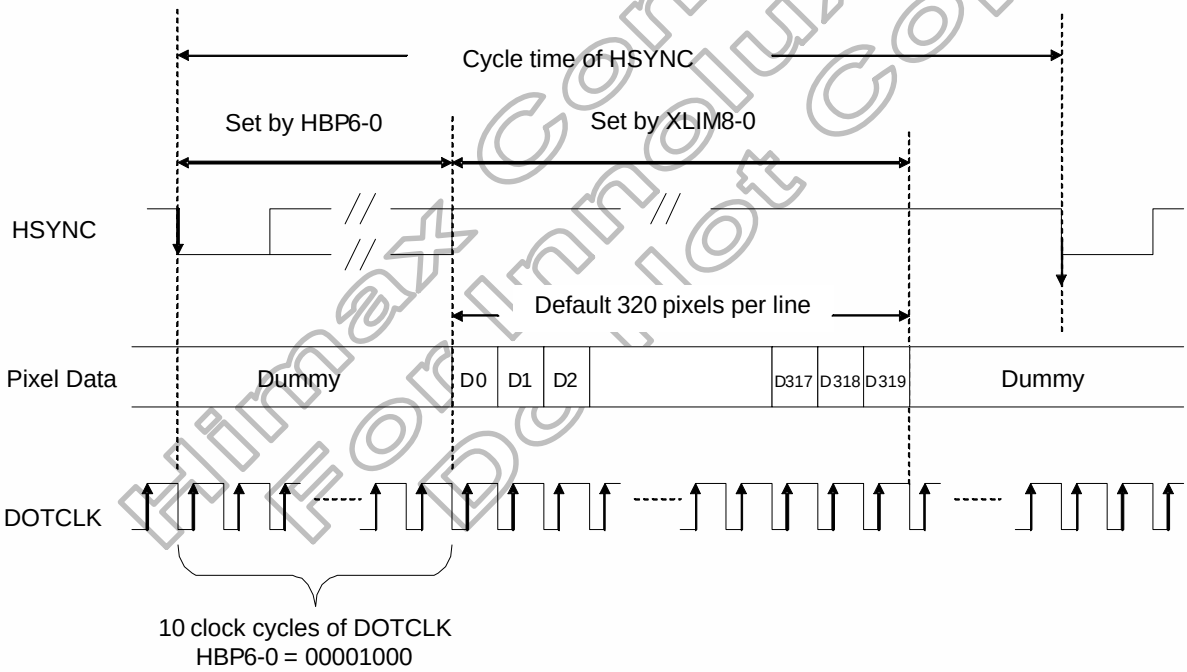

Figure 7. 15 No. of Clock Cycle of Clock

Himax Confidential
For Innolux Only
Do not Copy

STH1-0: Adjust the first valid data by dot clock. This setting is not valid in parallel RGB input interface.
STH = 00: +0 dot clock
STH = 01: +1 dot clock
STH = 10: +2 dot clock
STH = 11: +3 dot clock

VBP6-0: Set the delay period from falling edge of VSYNC to first valid line. The line data within this delay period will be treated as dummy line. The setting is only effective in SYNC mode timing.

VBP6	VBP5	VBP4	VBP3	VBP2	VBP1	VBP0	No. of clock cycle of HSYNC
0	0	0	0	0	0	0	Can't set
0	0	0	0	0	0	1	Can't set
0	0	0	0	0	1	0	2
0	0	0	0	0	1	1	3
0	0	0	0	1	0	0	4
							: Step = 1 :
1	1	1	1	1	0	0	124
1	1	1	1	1	0	1	125
1	1	1	1	1	1	0	126
1	1	1	1	1	1	1	127

Table 7. 15 No. of Clock Cycle of HSYNC

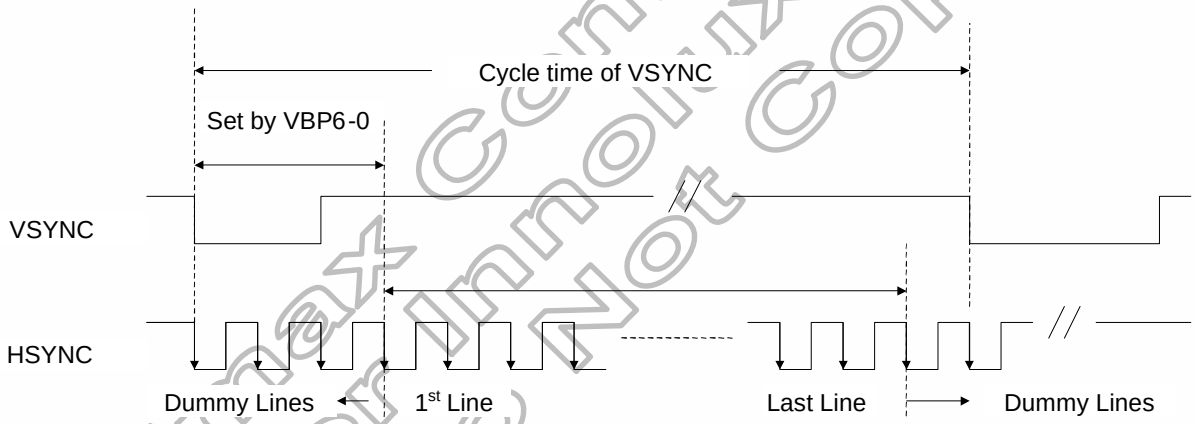

Figure 7. 16 No. of Clock Cycle of HSYNC

Himax Confidential
For Innolux
Do Not Copy

Power Control 4 (R1Eh)

R/W	RS	IB15	IB14	IB13	IB12	IB11	IB10	IB9	IB8	IB7	IB6	IB5	IB4	IB3	IB2	IB1	IB0
W	1	0	0	0	0	0	0	0	0	nOTP	VCM6	VCM5	VCM4	VCM3	VCM2	VCM1	VCM0

Figure 7. 17 Power Control 4

nOTP: nOTP=0, VCOM6-0 value is controlled by OTP memory. (Default)
nOTP=1, VCOM6-0 value is controlled by SPI register.

VCM6-0: Set the VCOMH voltage if nOTP = “1”. These bits amplify the VCOMH voltage 0.36 to 0.995 times the VLCD63 voltage.

VCM6	VCM5	VCM4	VCM3	VCM2	VCM1	VCM0	VCOMH
0	0	0	0	0	0	0	VLCD63 x 0.360
0	0	0	0	0	0	1	VLCD63 x 0.365
0	0	0	0	0	1	0	VLCD63 x 0.370
0	0	0	0	0	1	1	VLCD63 x 0.375
0	0	0	0	1	0	0	VLCD63 x 0.380
:	:	:	:	:	:	:	Step = 0.005
1	1	1	1	1	0	0	VLCD63 x 0.980
1	1	1	1	1	0	1	VLCD63 x 0.985
1	1	1	1	1	1	0	VLCD63 x 0.990
1	1	1	1	1	1	1	VLCD63 x 0.995

Note: 2V < VCOMH < VLCD63

Table 7. 16 VCOMH

Himax Confidential
For Innolux Only
Do Not Copy

Gamma Control 1 (R30h to R37h)

R/W	RS	IB15	IB14	IB13	IB12	IB11	IB10	IB9	IB8	IB7	IB6	IB5	IB4	IB3	IB2	IB1	IB0
W	1	0	0	0	0	0	PKP1	PKP1	PKP1	0	0	0	0	0	PKP0	PKP0	PKP0
W	1	0	0	0	0	0	PKP3	PKP3	PKP3	0	0	0	0	0	PKP2	PKP2	PKP2
W	1	0	0	0	0	0	PKP5	PKP5	PKP5	0	0	0	0	0	PKP4	PKP4	PKP4
W	1	0	0	0	0	0	PRP1	PRP1	PRP1	0	0	0	0	0	PRP0	PRP0	PRP0
W	1	0	0	0	0	0	PKN1	PKN1	PKN1	0	0	0	0	0	PKN0	PKN0	PKN0
W	1	0	0	0	0	0	PKN3	PKN3	PKN3	0	0	0	0	0	PKN2	PKN2	PKN2
W	1	0	0	0	0	0	PKN5	PKN5	PKN5	0	0	0	0	0	PKN4	PKN4	PKN4
W	1	0	0	0	0	0	PRN1	PRN1	PRN1	0	0	0	0	0	PRN0	PRN0	PRN0

Figure 7. 18 Gamma Control 1

PKP52–00: Gamma micro adjustment registers for the positive polarity output.
PRP12-00: Gradient adjustment registers for the positive polarity output.
PKN52-00: Gamma micro adjustment registers for the negative polarity output.
PRN12-00: Gradient adjustment registers for the negative polarity output.

Gamma Control 2 (R3Ah to R3Bh)

R/W	RS	IB15	IB14	IB13	IB12	IB11	IB10	IB9	IB8	IB7	IB6	IB5	IB4	IB3	IB2	IB1	IB0
W	1	0	0	0	VRP14	VRP13	VRP12	VRP11	VRP10	0	0	0	0	VRP03	VRP02	VRP01	VRP00
W	1	0	0	0	VRN14	VRN13	VRN12	VRN11	VRN10	0	0	0	0	VRN03	VRN02	VRN01	VRN00

Figure 7. 19 Gamma Control 2

VRP14-00: Adjustment registers for amplification adjustment of the positive polarity output.
VRN14-00: Adjustment registers for the amplification adjustment of the negative polarity output.
(Refer to Gamma Adjustment Function for details)

Himax Confidential
For Innolux Only
Do Not Copy

7.4 Secondary Register Command Table

Reg No.	Register	IB15	IB14	IB13	IB12	IB11	IB10	IB9	IB8	IB7	IB6	IB5	IB4	IB3	IB2	IB1	IB0
01h	DISPLAY INTERFACE	IM	0	0	0	0	0	0	0	REV	0	0	0	0	0	0	0
02h	DISPLAY DATA CONTROL	0	0	0	0	0	0	0	0	0	0	0	0	0	0	0	0
03h	ENTER MODE	VPL	HPL	DPL	EPL	0	0	0	SS	0	0	0	0	0	0	STB	0
04h	GATE CONTROL 1	0	0	CLW1	CLW0	0	0	0	0	0	0	GAON	0	0	0	0	0
05h	GATE CONTROL 2	0	NW	0	DSC	0	0	0	0	0	0	0	0	0	0	0	0
06h	DISPLAY CONTROL 1	0	0	0	0	0	0	0	0	VBP7	VBP6	VBP5	VBP4	VBP3	VBP2	VBP1	VBP0
07h	DISPLAY CONTROL 2	0	0	0	0	0	0	HBP9	HBP8	HBP7	HBP6	HBP5	HBP4	HBP3	HBP2	HBP1	HBP0
09h	POWER CONTROL 1	MSEL	EXM	0	0	GON	0	POC	0	0	SAP2	SAP1	SAP0	0	0	0	0
0ah	POWER CONTROL 2	0	0	0	VDV4	VDV3	VDV2	VDV1	VDV0	0	0	0	VCM4	VCM3	VCM2	VCM1	VCM0
10h	GAMMA CONTROL(1)	0	0	0	0	0	PRP12	PRP11	PRP10	0	0	0	0	0	PRP02	PRP01	PRP00
11h	GAMMA CONTROL(1)	0	0	0	0	0	PRN12	PRN11	PRN10	0	0	0	0	0	PRN02	PRN01	PRN00
12h	GAMMA CONTROL(1)	0	0	0	VRP14	VRP13	VRP12	VRP11	VRP10	0	0	0	0	VRP03	VRP02	VRP01	VRP00
13h	GAMMA CONTROL(1)	0	0	0	VRN14	VRN13	VRN12	VRN11	VRN10	0	0	0	0	VRN03	VRN02	VRN01	VRN00
14h	GAMMA CONTROL(1)	0	0	0	0	0	PKP12	PKP11	PKP10	0	0	0	0	0	PKP02	PKP01	PKP00
15h	GAMMA CONTROL(1)	0	0	0	0	0	PKP32	PKP31	PKP30	0	0	0	0	0	PKP22	PKP21	PKP20
16h	GAMMA CONTROL(1)	0	0	0	0	0	PKP52	PKP51	PKP50	0	0	0	0	0	PKP42	PKP41	PKP40
17h	GAMMA CONTROL(1)	0	0	0	0	0	PKN12	PKN11	PKN10	0	0	0	0	0	PKN02	PKN01	PKN00
18h	GAMMA CONTROL(1)	0	0	0	0	0	PKN32	PKN31	PKN30	0	0	0	0	0	PKN22	PKN21	PKN20
19h	GAMMA CONTROL(1)	0	0	0	0	0	PKN52	PKN51	PKN50	0	0	0	0	0	PKN42	PKN41	PKN40

Table 7. 17 Command Table

Himax Confidential
For Internal Use Only
Do Not Copy

7.5 Secondary Register Default Value

Reg No.	Hex Code	Register Bit Value
R01h	0000	IM="0", REV="0"
R02h	0000	
R03h	0100	VPL="0", HPL="0", DPL="0", EPL="0", SS="1", STB="0"
R04h	3000	CLW1="1", CLW0="1", GAON="0"
R05h	5000	NW="1", DSC="1"
R06h	000A	VBP7="0", VBP6="0", VBP5="0", VBP4="0", VBP3="1", VBP2="0", VBP1="1", VBP0="0"
R07h	0021	HBP9="0", HBP8="0", HBP7="0", HBP6="0", HBP5="1", HBP4="0", HBP3="0", HBP2="0", HBP1="0", HBP0="1"
R09h	0A00	MSEL="0", EXM="0", GON="1", POC="1", SAP2="0", SAP1="0", SAP0="0"
R0Ah	040F	VDV4="0", VDV3="0", VDV2="1", VDV1="0", VDV0="0",VCM4="0", VCM3="1", VCM2="1", VCM1="1", VCM0="1"
R10h	0000	PRP12="0", PRP11="0", PRP10="0", PRP02="0", PRP01="0", PRP00="0"
R11h	0000	PRN12="0", PRN11="0", PRN10="0", PRN02="0", PRN01="0", PRN00="0"
R12h	0904	VRP14="0", VRP13="1", VRP12="0", VRP11="0", VRP10="1", VRP03="0", VRP02="1", VRP01="0", VRP00="0"
R13h	0904	VRN14="0", VRN13="1", VRN12="0", VRN11="0", VRN10="1", VRN03="0", VRN02="1", VRN01="0", VRN00="0"
R14h	0000	PKP12="0", PKP11="0", PKP10="0", PKP02="0", PKP01="0", PKP00="0"
R15h	0407	PKP32="1", PKP31="0", PKP30="0", PKP22="1", PKP21="1", PKP20="1"
R16h	0202	PKP52="0", PKP51="1", PKP50="0", PKP42="0", PKP41="1", PKP40="0"
R17h	0505	PKN12="1", PKN11="0", PKN10="1", PKN02="1", PKN01="0", PKN00="1"
R18h	0003	PKN32="0", PKN31="0", PKN30="0", PKN32="0", PKN31="1", PKN30="1"
R19h	0707	PKN52="1", PKN51="1", PKN50="1", PKN42="0", PKN41="1", PKN40="1"

Table 7. 18 Registers Default Value(Secondary Register Map)

Himax Confidential
For Innolux only
Do Not Copy

This information contained herein is the exclusive property of Himax and shell not be distributed, reproduced, or disclosed in whole or in part without prior written permission of Himax.

7.6 Secondary Regsiter Command Description

DISPLAY INTERFACE CONTROL (R01H)

R/W	RS	IB15	IB14	IB13	IB12	IB11	IB10	IB9	IB8	IB7	IB6	IB5	IB4	IB3	IB2	IB1	IB0
W	1	I M	0	0	0	0	0	0	0	REV	0	0	0	0	0	0	0

Figure 7. 20 Display Interface Control Instruction

IM: Specify the PD data weight.
IM="0": 24bits interface
IM="1": 8bits interface

REV: Reverses all character and graphics display sections.
REV="0": Normally White Panel
REV="1": Normally Black Panel

REV	Data	Source Output Level of Displayed Area	
		Positive Polarity	Negative Polarity
0	6'b000000 : : 6'b111111	V0 : : V63	V63 : : V0
1	6'b000000 : : 6'b111111	V63 : : V0	V0 : : V63

Table 7. 19 REV Bit And Source Output Level Of Displayed Area

Himax Confidential
For Innolux Only
Do Not Copy

This information contained herein is the exclusive property of Himax and shell not be distributed, reproduced, or disclosed in whole or in part without prior written permission of Himax.

ENTRY MODE (R03H)

R/W	RS	IB15	IB14	IB13	IB12	IB11	IB10	IB9	IB8	IB7	IB6	IB5	IB4	IB3	IB2	IB1	IB0
W	1	VPL	HPL	DPL	EPL	0	0	0	S S	0	0	0	0	0	0	STB	0

Figure 7. 21 Entry Mode Instruction

VPL: Reverses the polarity of the VSYNC signal.
VPL="0": VSYNC is low active.
VPL="1": VSYNC is high active.

HPL: Reverses the polarity of the HSYNC signal.
HPL="0": HSYNC is low active.
HPL="1": HSYNC is high active.

DPL: Reverses the polarity of the DOTCLK signal.
DPL="0": Display data is fetched at rising edge of DOTCLK.
DPL="1": Display data is fetched at falling edge of DOTCLK.

EPL: Set the polarity of ENABLE pin while using DE interface mode.
EPL="0": DE=L write data, DE=H won't write data.
EPL="1": DE=H write data, DE=L won't write data.

SS: Selects the output shift direction of the source driver.
SS="0": S960→S1
SS="1": S1→S960

STB: Standby mode
STB="1": Standby mode (SD/GD/TCON/VCOM disable)
STB="0": Standby mode cancel

Himax Confidential
For Innolux Only
Do Not Copy

This information contained herein is the exclusive property of Himax and shell not be distributed, reproduced, or disclosed in whole or in part without prior written permission of Himax.

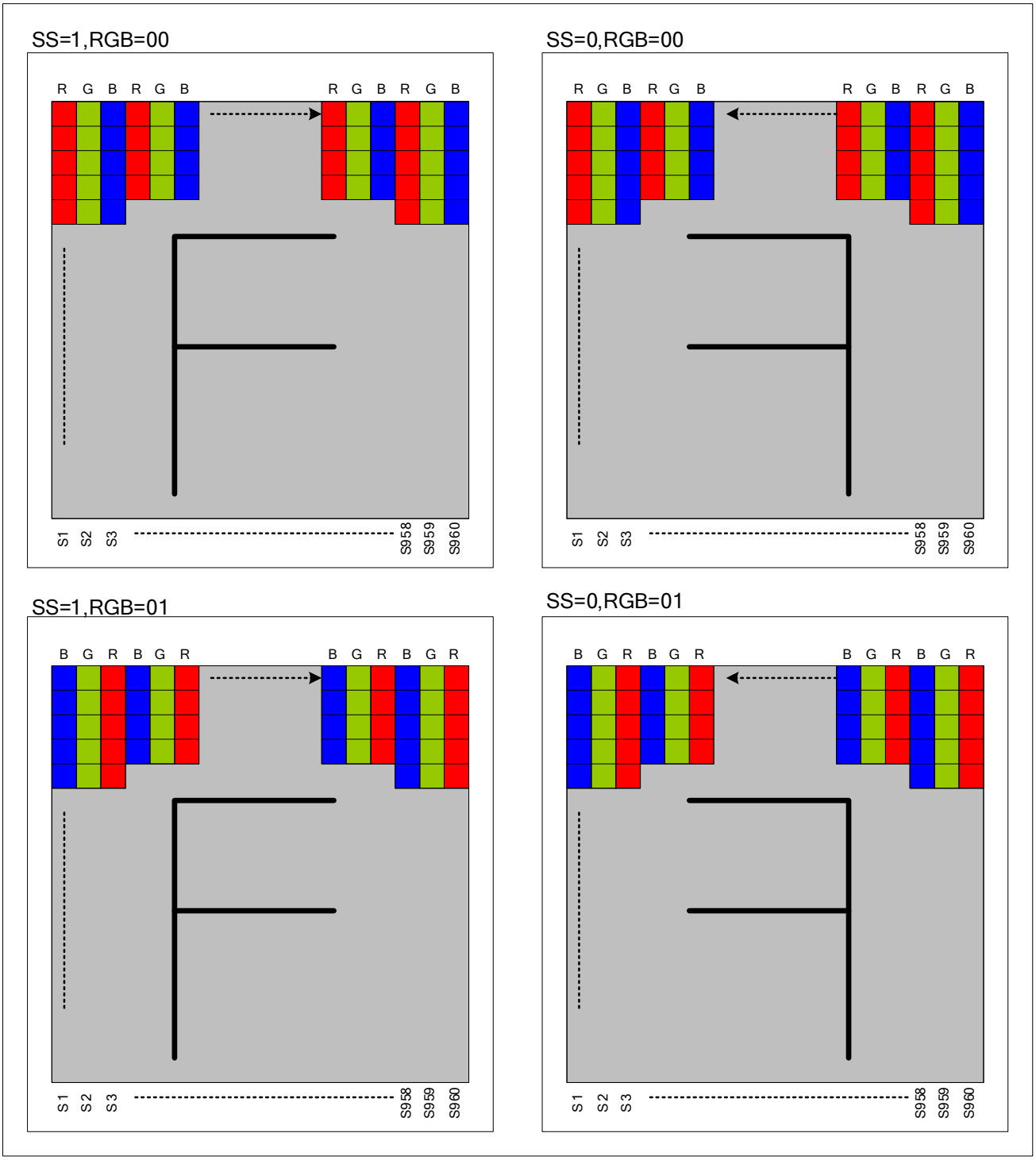

Figure 7. 22 Display Direction According To SS, RGB

This information contained herein is the exclusive property of Himax and shell not be distributed, reproduced, or disclosed in whole or in part without prior written permission of Himax.

GATE CONTROL 1 (R04H)

R/W	RS	IB15	IB14	IB13	IB12	IB11	IB10	IB9	IB8	IB7	IB6	IB5	IB4	IB3	IB2	IB1	IB0
W	1	0	0	CLW1	CLW0	0	0	0	0	0	0	GAON	0	0	0	0	0

Figure 7. 23 Gate Control1 Instruction

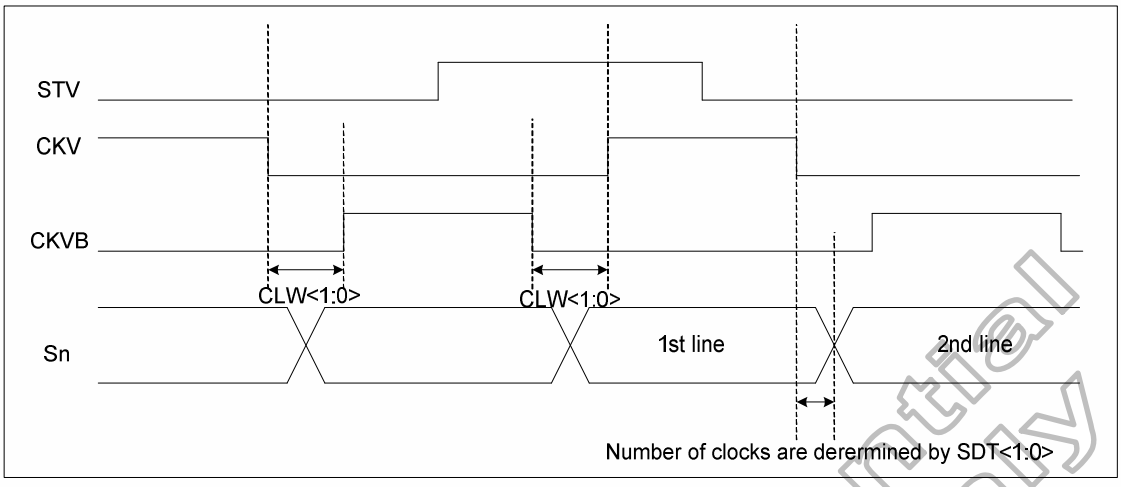

Figure 7. 24 CLW Bits

CLW2-0: Specify the pulse output timing of the CKV and CKVB signal.

CLW1	CLW0	OEV
0	0	1.5us
0	1	3.0us
1	0	4.5us
1	1	6.0us

Note: The values indicate the number of clocks after the falling edge of CKV & CKVB.

Table 7. 20 CLW Bits Setting

GAON: Gate all on.
GAON="0", Gate all on disable.
GAON="1", Gate all on enable.

Himax Confidential
For Innolux Only
Do Not Copy

GATE CONTROL2 (R05H)

R/W	RS	IB15	IB14	IB13	IB12	IB11	IB10	IB9	IB8	IB7	IB6	IB5	IB4	IB3	IB2	IB1	IB0
W	1	0	NW	0	DSC	0	0	0	0	0	0	0	0	0	0	0	0

Figure 7. 25 Gate Control2 Instruction

NW: Frame or line inversion selection
NW = "0": Frame inversion.
NW = "1": Line inversion.

DSC: Specify state of gate driver output signal.
DSC="0": Gate output disable, GOUT=VGL.
DSC="1": Gate output enable.

DISPLAY CONTROL1 (R06H)

R/W	RS	IB15	IB14	IB13	IB12	IB11	IB10	IB9	IB8	IB7	IB6	IB5	IB4	IB3	IB2	IB1	IB0
W	1	0	0	0	0	0	0	0	0	VBP7	VBP6	VBP5	VBP4	VBP3	VBP2	VBP1	VBP0

Figure 7. 26 Display Control1 Instruction

VBP7-0: Vertical back porch. (4H < VBP < 255H)

VBP7	VBP6	VBP5	VBP4	VBP3	VBP2	VBP1	VBP0	No. of clock cycle of HSYNC
0	0	0	0	0	0	0	0	Can't set
0	0	0	0	0	0	0	1	Can't set
0	0	0	0	0	0	1	0	Can't set
0	0	0	0	0	0	1	1	Can't set
0	0	0	0	0	1	0	0	4
								: Step = 1 :
1	1	1	1	1	1	0	0	252
1	1	1	1	1	1	0	1	253
1	1	1	1	1	1	1	0	254
1	1	1	1	1	1	1	1	255

Himax Confidential
For Innolux Only
Do Not Copy

This information contained herein is the exclusive property of Himax and shell not be distributed, reproduced, or disclosed in whole or in part without prior written permission of Himax.

DISPLAY CONTROL2 (R07H)

R/W	RS	IB15	IB14	IB13	IB12	IB11	IB10	IB9	IB8	IB7	IB6	IB5	IB4	IB3	IB2	IB1	IB0
W	1	0	0	0	0	0	0	HBP9	HBP8	HBP7	HBP6	HBP5	HBP4	HBP3	HBP2	HBP1	HBP0

Figure 7. 27 Display Control2 Instruction

HBP9-0: Horizontal back porch. (8clock < HBP < 1023clock)
8clock < HBP of the Parallel RGB < 255clock
8clock < HBP of the Serial RGB < 1023clock

HBP9	HBP8	HBP7	HBP6	HBP5	HBP4	HBP3	HBP2	HBP1	HBP0	No. of Clock Cycle
0	0	0	0	0	0	0	0	0	0	Can't set
0	0	0	0	0	0	0	0	0	1	Can't set
0	0	0	0	0	0	0	0	1	0	Can't set
0	0	0	0	0	0	0	0	1	1	Can't set
0	0	0	0	0	0	0	1	0	0	Can't set
0	0	0	0	0	0	0	1	0	1	Can't set
0	0	0	0	0	0	0	1	1	0	Can't set
0	0	0	0	0	0	0	1	1	1	Can't set
0	0	0	0	0	0	1	0	0	0	8
0	0	0	0	0	0	1	0	0	1	9
										: Step = 1 :
1	1	1	1	1	1	1	1	1	0	1022
1	1	1	1	1	1	1	1	1	1	1023

Himax Confidential
For Innolux Only
Do Not Copy

POWER CONTROL 1 (R09H)

R/W	RS	IB15	IB14	IB13	IB12	IB11	IB10	IB9	IB8	IB7	IB6	IB5	IB4	IB3	IB2	IB1	IB0
W	1	MSEL	EXM	0	0	GON	0	POC	0	0	SAP2	SAP1	SAP0	0	0	0	0

Figure 7. 28 Power Control1 Instruction

MSEL: Select the polarity of POL.
MSEL="0": POL is in phase with internal VCOM.
MSEL="1": POL is reverse with internal VCOM.

EXM: VCOM enable selection.
EXM = "0": VCOM circuit enable.
EXM = "1": VCOM circuit disable, VCOMOUT floating.

GON: VCOM enable selection.
GON= "0": VCOM circuit disable, VCOMOUT floating.
GON= "1": VCOM circuit enable.

POC: Power control.
POC="0": SD output the white pattern.
POC="1": SD output the normal display.

SAP2-0: Set current amount of SD/Power circuit

SAP2	SAP1	SAP0	Amount of Current in SD/Power circuit
0	0	0	Standby mode(default)
0	0	1	Small
0	1	0	Small or medium
0	1	1	Medium
1	0	0	Medium or large
1	0	1	Large
1	1	0	Setting Inhibited
1	1	1	Setting Inhibited

Table 7. 21 SAP Bits Setting

Himax Confidential
For Internal Only
Do Not Copy

Power Control(R0Ah)

R/W	RS	IB15	IB14	IB13	IB12	IB11	IB10	IB9	IB8	IB7	IB6	IB5	IB4	IB3	IB2	IB1	IB0
W	1	0	0	0	VDV4	VDV3	VDV2	VDV1	VDV0	0	0	0	VCM4	VCM3	VCM2	VCM1	VCM0

Figure 7. 29 Power Control

VDV4-0: Set the alternating amplitudes of VCOM at the VCOM alternating drive. These bits amplify VCOM amplitude 0.7875 to 1.2525 times the VLCD63 voltage. External voltage at VCOMR is referenced when VDV = “01111xx”.

VDV4	VDV3	VDV2	VDV1	VDV0	VCOM Amplitude
0	0	0	0	0	VLCD63 x 0.7875
0	0	0	0	1	VLCD63 x 0.8025
0	0	0	1	0	VLCD63 x 0.8175
0	0	0	1	1	VLCD63 x 0.8325
					: Step = 0.0150 :
1	0	0	1	*	Setting inhibited
					: Step = 0.0150 :
1	1	1	0	0	VLCD63 x 1.2225
1	1	1	1	0	VLCD63 x 1.2375
1	1	1	1	1	VLCD63 x 1.2525

Table 7. 22 VCOM Amplitude

VCM4-0: Set the VCOMH voltage if nOTP=“1”. These bits amplify the VCOMH voltage 0.68 to 0.990 times the VLCD63 voltage.

VCM4	VCM3	VCM2	VCM1	VCM0	VCOMH
0	0	0	0	0	VLCD63 x 0.680
0	0	0	0	1	VLCD63 x 0.690
0	0	0	1	0	VLCD63 x 0.700
0	0	0	1	1	VLCD63 x 0.710
0	0	1	0	0	VLCD63 x 0.720
		: : :			: Step = 0.010 :
1	1	1	0	0	VLCD63 x 0.960
1	1	1	0	1	VLCD63 x 0.970
1	1	1	1	0	VLCD63 x 0.980
1	1	1	1	1	VLCD63 x 0.990

Note: 2V < VCOMH < VLCD63

Table 7. 23 VCOMH

Himax Confidential
For Internal Use Only
Do Not Copy

This information contained herein is the exclusive property of Himax and shell not be distributed, reproduced, or disclosed in whole or in part without prior written permission of Himax.

Gamma Control 1 (R10h to R11h and R14h to R19h)

R/W	RS	IB15	IB14	IB13	IB12	IB11	IB10	IB9	IB8	IB7	IB6	IB5	IB4	IB3	IB2	IB1	IB0
W	1	0	0	0	0	0	PKP1	PKP1	PKP1	0	0	0	0	0	PKP0	PKP0	PKP0
W	1	0	0	0	0	0	PKP3	PKP3	PKP3	0	0	0	0	0	PKP2	PKP2	PKP2
W	1	0	0	0	0	0	PKP5	PKP5	PKP5	0	0	0	0	0	PKP4	PKP4	PKP4
W	1	0	0	0	0	0	PRP1	PRP1	PRP1	0	0	0	0	0	PRP0	PRP0	PRP0
W	1	0	0	0	0	0	PKN1	PKN1	PKN1	0	0	0	0	0	PKN0	PKN0	PKN0
W	1	0	0	0	0	0	PKN3	PKN3	PKN3	0	0	0	0	0	PKN2	PKN2	PKN2
W	1	0	0	0	0	0	PKN5	PKN5	PKN5	0	0	0	0	0	PKN4	PKN4	PKN4
W	1	0	0	0	0	0	PRN1	PRN1	PRN1	0	0	0	0	0	PRN0	PRN0	PRN0

Figure 7. 30 Gamma Control 1

PKP52-00: Gamma micro adjustment registers for the positive polarity output
PRP12-00: Gradient adjustment registers for the positive polarity output
PKN52-00: Gamma micro adjustment registers for the negative polarity output
PRN12-00: Gradient adjustment registers for the negative polarity output

Gamma Control 2 (R12h to R13h)

R/W	RS	IB15	IB14	IB13	IB12	IB11	IB10	IB9	IB8	IB7	IB6	IB5	IB4	IB3	IB2	IB1	IB0
W	1	0	0	0	VRP14	VRP13	VRP12	VRP11	VRP10	0	0	0	0	VRP03	VRP02	VRP01	VRP00
W	1	0	0	0	VRN14	VRN13	VRN12	VRN11	VRN10	0	0	0	0	VRN03	VRN02	VRN01	VRN00

Figure 7. 31 Gamma Control 2

VRP14-00: Adjustment registers for amplification adjustment of the positive polarity output.
VRN14-00: Adjustment registers for the amplification adjustment of the negative polarity output.
(Refer to Gamma Adjustment Function for details)

Himax Confidential
For Innolux Only
Do Not Copy

7.7 Power Up/Down Sequence of the Secondary Register Command

When set to Secondary Register command and CPE=VSS, the charge pump circuit will not enable and the VCIX2, VGH, VGL need to external input.

VCOM can be selected to internal generation or external input by setting register R09h EXM or GON, it needs set both EXM=0 and GON=1, VCOM will be internal generated. If each EXM=1 or GON=0, then VCOM circuit will be disabled, and VCOM need to be external input.

Please follow the recommend power up/down sequence as below steps:
(Set VCOM is external inputed.)

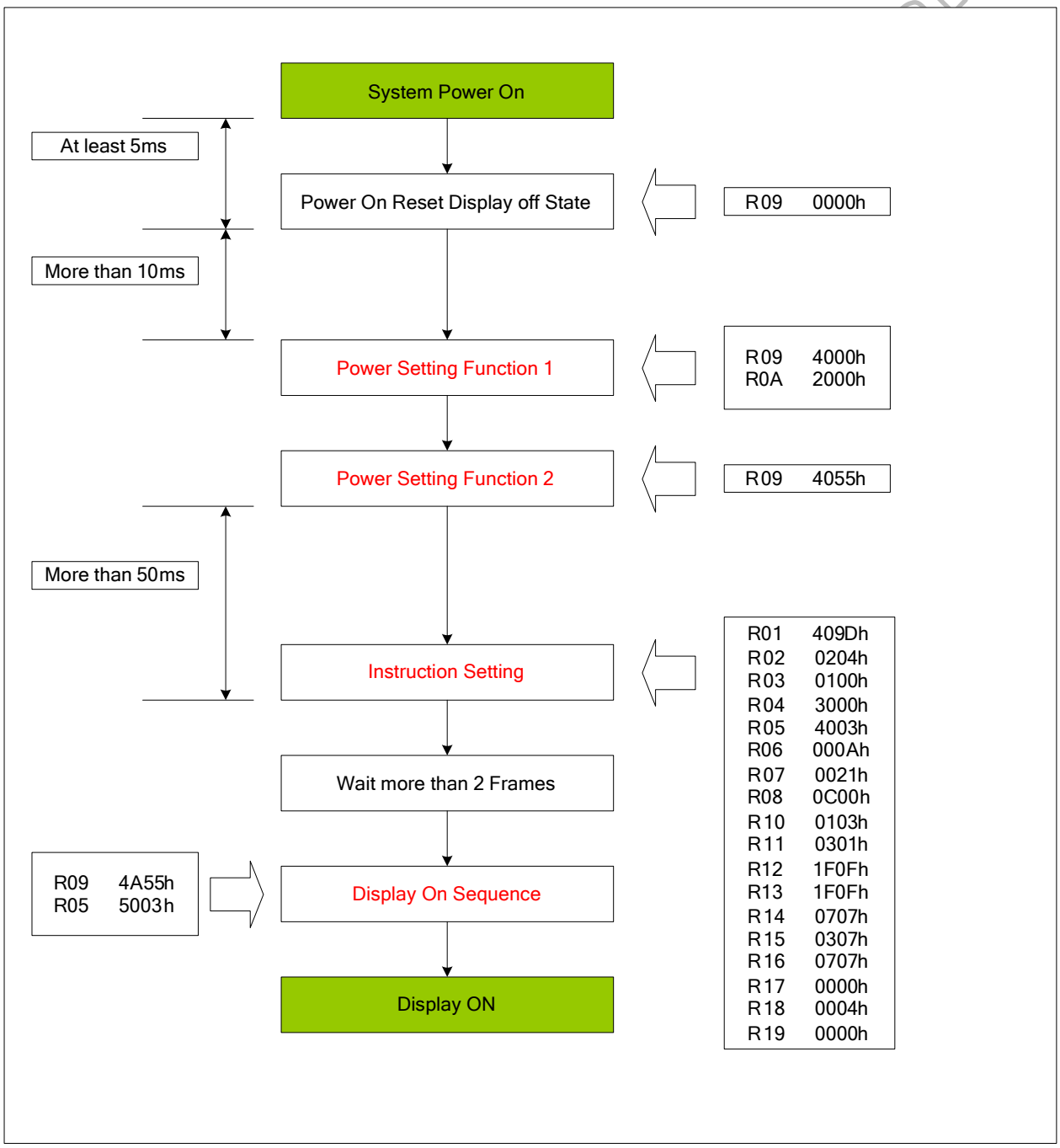

Figure 7. 32 Power Up Sequence when SPSW connect to VSS (CPE = VSS)

This information contained herein is the exclusive property of Himax and shell not be distributed, reproduced, or disclosed in whole or in part without prior written permission of Himax.

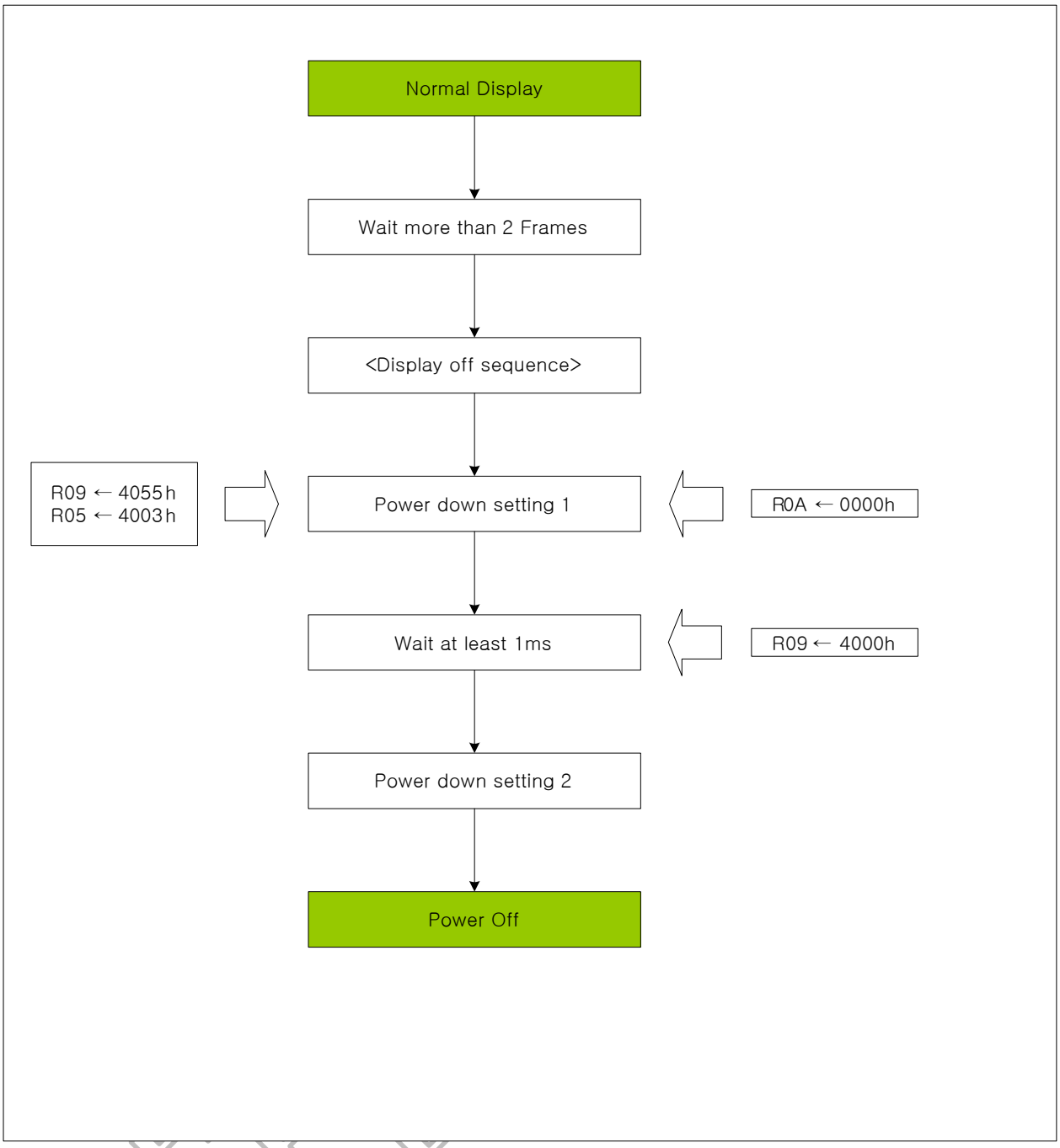

Figure 7. 33 Power Down Sequence when SPSW connect to VSS (CPE = VSS)

When set to Secondary register command and CPE=VDDIO, the charge pump circuit will enable and the VCIX2, VGH, VGL, VCOM will internal generation.

Please follow the power up/down sequence as Figure 12.10 and Figure 12.11.

This information contained herein is the exclusive property of Himax and shell not be distributed, reproduced, or disclosed in whole or in part without prior written permission of Himax.

8. OTP Programming

OTP Write Sequence

Step	Operation
1	Power up the module. Set nOTP=1 and find out the appropriate value of VCM[6:0] and power off the system
2	Power up the system with VDD=VDDIO=2.5V. If REGVDD=1, set R0Dh=16'h0324.
3	Set appropriate values found from step 1 to register of VCOM (R1Eh)
4	Set R06h=16'h2820 to stop VGH/VGL pumping. Wait 0.5s.
5	Set R60h=16'h8000
6	Set R60h=16'hC000
7	Connect 7.3V to VGH and 0V to VGL (Note1)
8	Set R60h=16'hC200
9	Set R60h=16'hC280
10	Wait 200us for completing this program
11	Set R60h=16'hC200
12	Remove 7.5V from VGH and 0V from VGL
13	Set R60h=16'h8200
14	Set R60h=16'h0200
15	Set R60h=16'h0040
16	Set R60h=16'h0000

Note1: VGH is connected to 7.1~7.4

Table 8. 1 OTP Programming Sequence

You can use above programming sequence to set VCM[6:0] value to OTP cell twice. If you want to check if the OTP cell is still available for programming, you can read the status from R61h shown below.

R/W	RS	IB15	IB14	IB13	IB12	IB11	IB10	IB9	IB8	IB7	IB6	IB5	IB4	IB3	IB2	IB1	IB0
R	1	0	0	0	0	0	0	0	0	IND	VCM6	VCM5	VCM4	VCM3	VCM2	VCM1	VCM0

Figure 8. 1 OTP Read Table

You can check the IND bit to see if the VCM[6:0] is still programmable or not. If IND=0, you can program new VCM[6:0] value to OTP. If IND=1, it means that the OTP cell have already programmed twice and you can't program it any more. IB6~IB0 indicate the currently effective VCM[6:0] setting in OTP cell.

OTP Programming circuitry

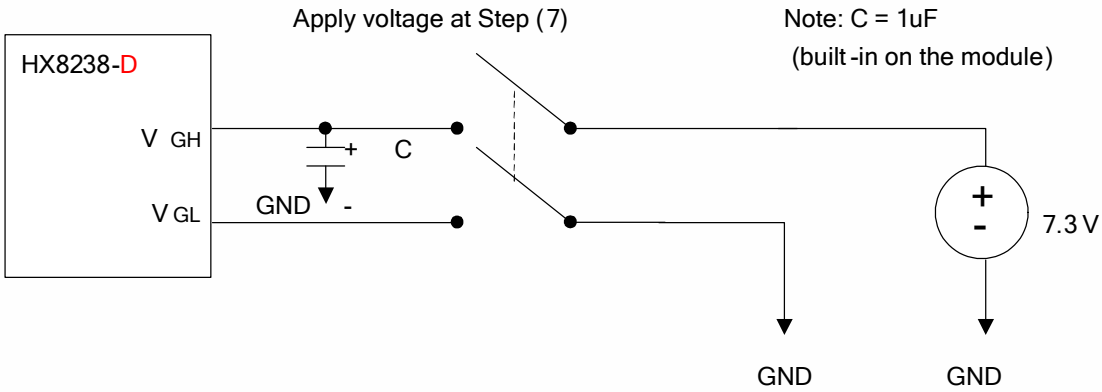

Figure 8. 2 OTP Programming Circuitry

Himax Confidential
For Innolux Only
Do Not Copy

9. Gamma Adjustment Function

The HX8238-D incorporates gamma adjustment function for the 262K-color display. Gamma adjustment is implemented by deciding the 8-grayscale levels with angle adjustment and micro adjustment register. Also, angle adjustment and micro adjustment is fixed for each of the internal positive and negative polarity. Set up by the liquid crystal panel's specification.

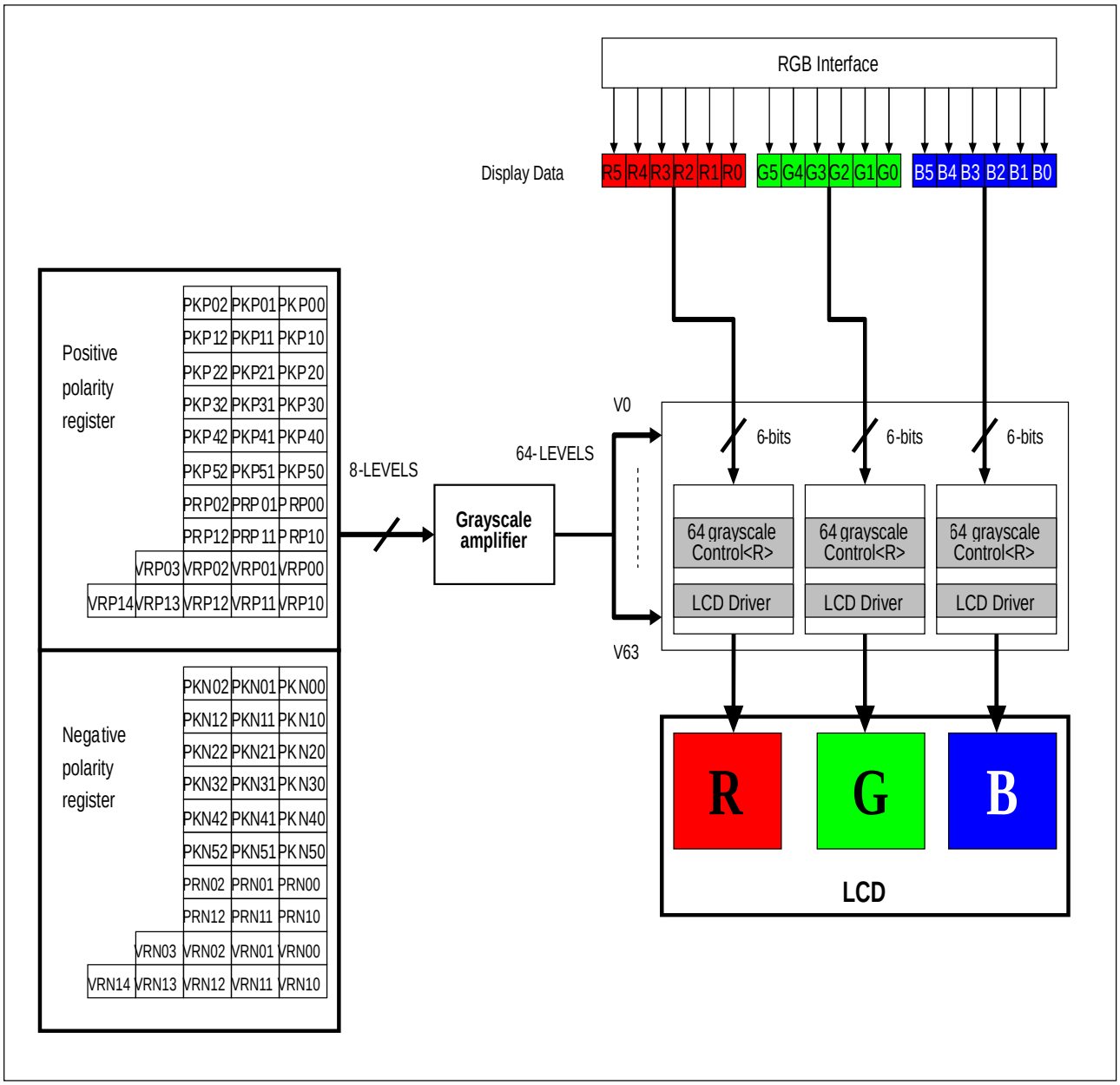

Figure 9. 1 Grayscale Control Block

This information contained herein is the exclusive property of Himax and shell not be distributed, reproduced, or disclosed in whole or in part without prior written permission of Himax.

9.1 Structure of Grayscale Amplifier

Below figure indicates the structure of the grayscale amplifier. It determines 8 levels (VIN0-VIN7) by the gradient adjuster and the micro adjustment register. Also, dividing these levels with ladder resistors generates V0 to V63.

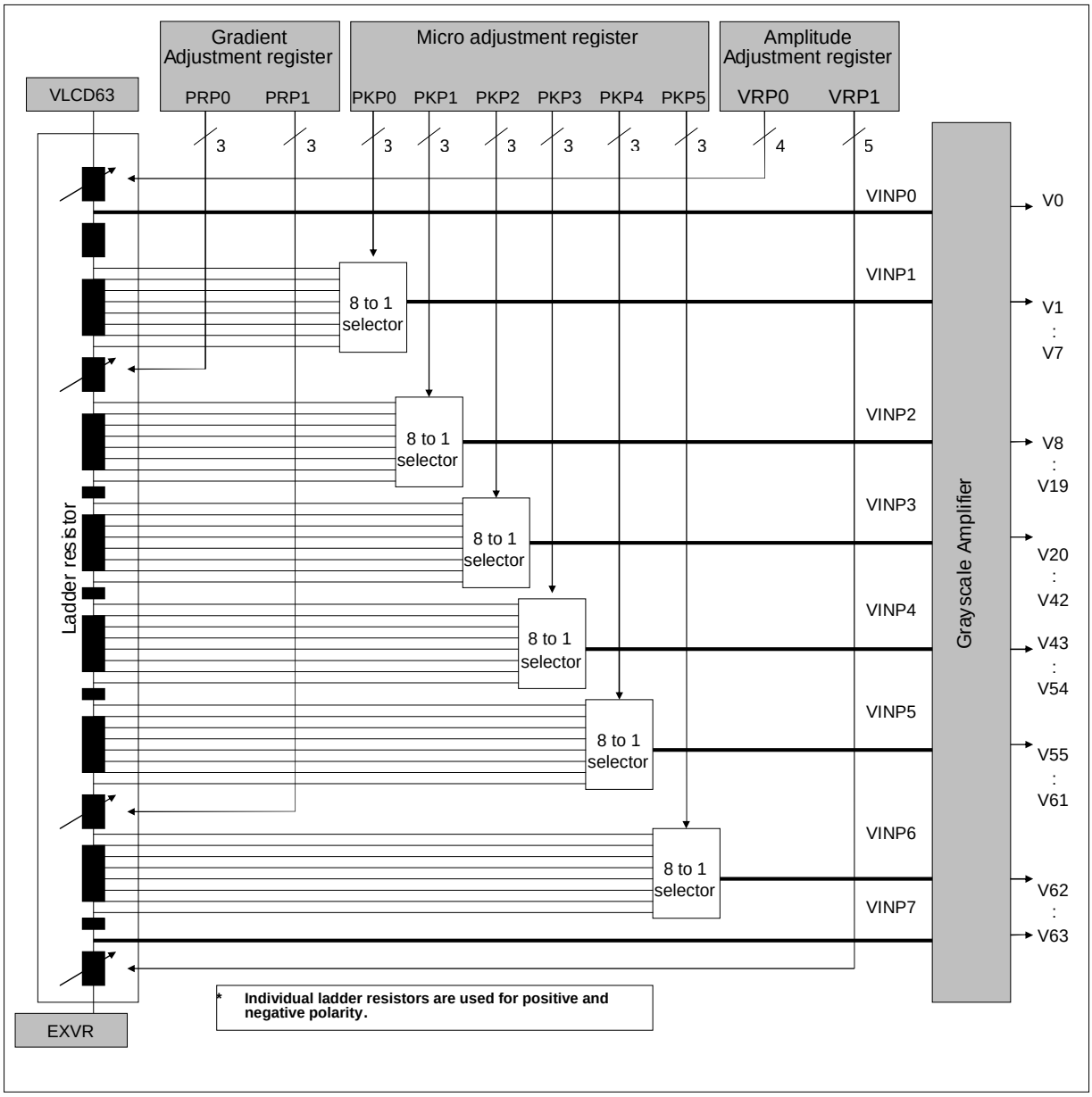

Figure 9. 2 Grayscale Amplifier

This information contained herein is the exclusive property of Himax and shell not be distributed, reproduced, or disclosed in whole or in part without prior written permission of Himax.

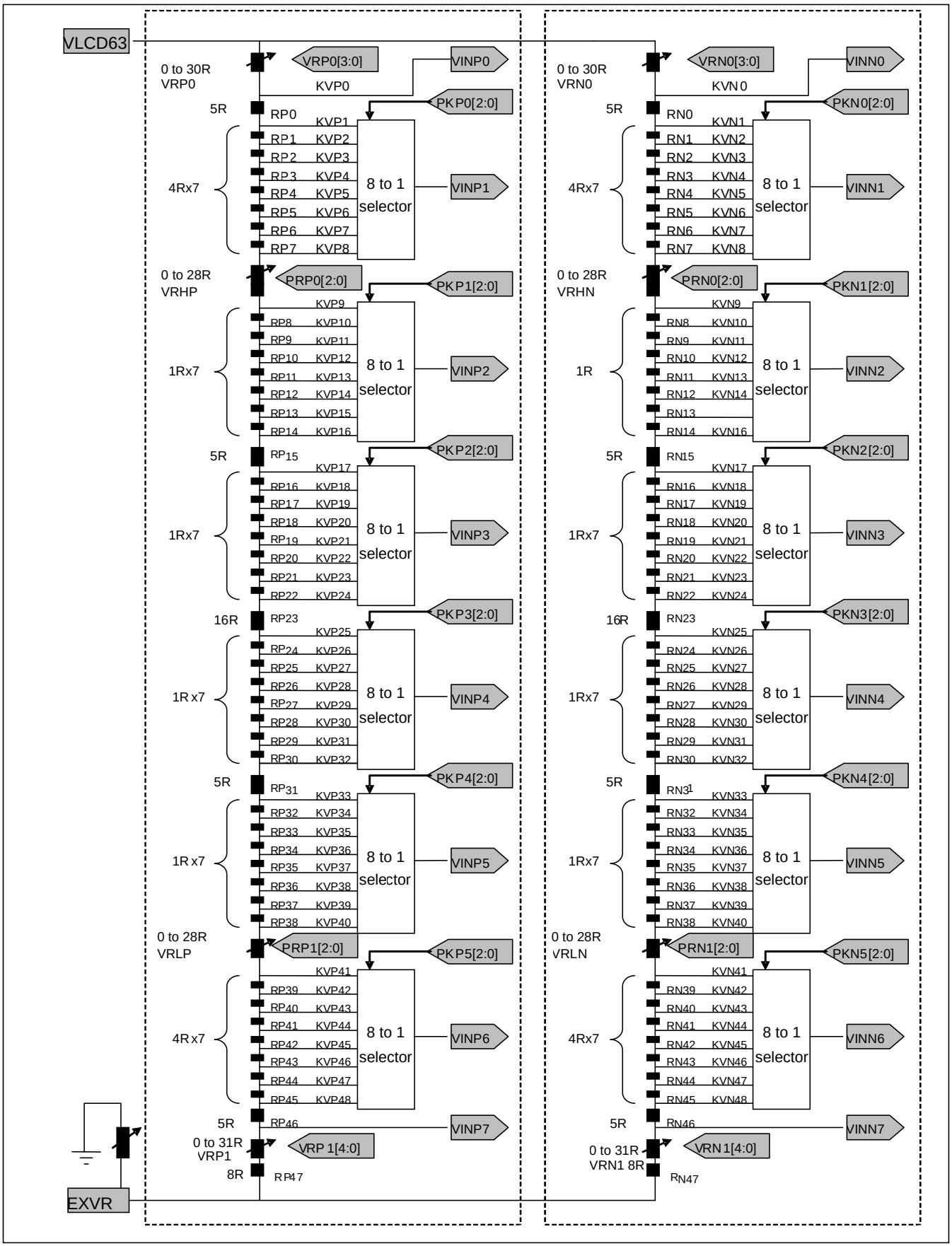

Figure 9. 3 Resistor Ladder for Gamma Voltages Generation

This information contained herein is the exclusive property of Himax and shell not be distributed, reproduced, or disclosed in whole or in part without prior written permission of Himax.

9.2 Gamma Adjustment Register

This block is the register to set up the grayscale voltage adjusting to the gamma specification of the LCD panel. This register can independent set up to positive/negative polarities and there are three types of register groups to adjust gradient, amplitude, and micro-adjustment on number of the grayscale, characteristics of the grayscale voltage. (Use the same setting of Reference-value and R.G. B.) Following graphics indicates the operation of each adjusting register.

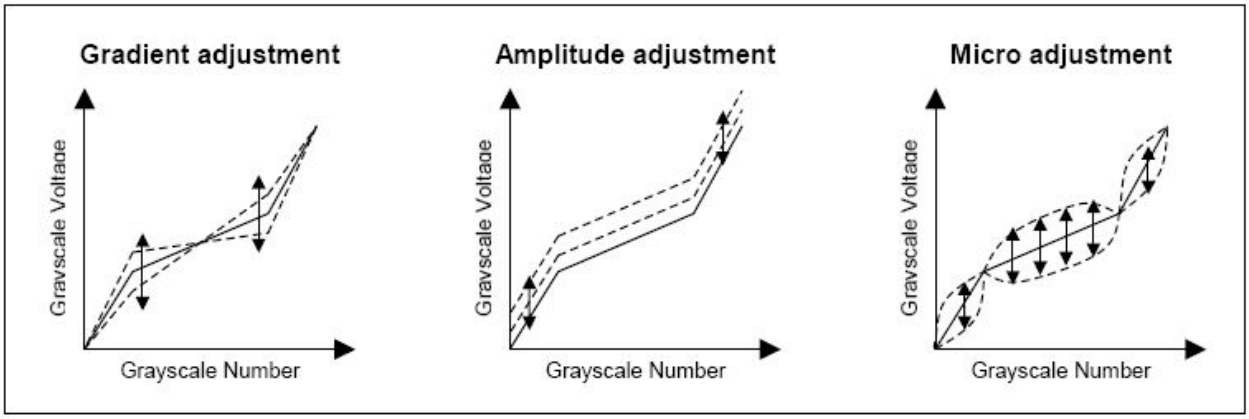

Figure 9. 4 Gamma Adjustment Function

9.2.1 Gradient Adjusting Register

The gradient-adjusting resistor is to adjust around middle gradient, specification of the grayscale number and the grayscale voltage without changing the dynamic range. To accomplish the adjustment, it controls the variable resistors in the middle of the ladder resistor by registers (PRP(N)0 / PRP(N)1) for the grayscale voltage generator. Also, there is an independent resistor on the positive/negative polarities in order for corresponding to asymmetry drive.

9.2.2 Amplitude Adjusting Register

The amplitude-adjusting resistor is to adjust amplitude of the grayscale voltage. To accomplish the adjustment, it controls the variable resistors in the boundary of the ladder resistor by registers (VRP(N)0 / VRP(N)1) for the grayscale voltage generator. Also, there is an independent resistor on the positive/negative polarities as well as the gradient-adjusting resistor.

9.2.3 Micro Adjusting Register

The micro-adjusting register is to make subtle adjustment of the grayscale voltage level. To accomplish the adjustment, it controls each reference voltage level by the 8 to 1 selector towards the 8-level reference voltage generated from the ladder resistor. Also, there is an independent resistor on the positive/negative polarities as well as other adjusting resistors.

Himax Confidential
For Innolux Use Only
Do Not Copy

This information contained herein is the exclusive property of Himax and shell not be distributed, reproduced, or disclosed in whole or in part without prior written permission of Himax.

9.3 Ladder Resistor / 8 to 1 Selector

This block outputs the reference voltage of the grayscale voltage. There are two ladder resistors including the variable resistor and the 8 to 1 selector selecting voltage generated by the ladder resistor. The gamma registers control the variable resistors and 8 to 1 selector resistors. Also, there has pin (EXVR) that can be connected to VSS or an external variable resistor for compensating the dispersion of length between both panels.

Variable Resistor

There are 3 types of the variable resistors that are for the gradient and amplitude adjustment. The resistance is set by the resistor (PRP(N)0 / PRP(N)1) and (VRP(N)0 / VRP(N)1) as below.

PRP(N)[0:1]	Resistance
000	0R
001	4R
010	8R
011	12R
100	16R
101	20R
110	24R
111	28R

Table 9. 1 PRP(N)

VRP(N)0	Resistance
0000	0R
0001	2R
0010	4R
: Step = 2R :	
1110	28R
1111	30R

Table 9. 2 VRP(N)0

VRP(N)1	Resistance
00000	0R
00001	1R
00010	2R
: Step = 1R :	
11110	30R
11111	31R

Table 9. 3 VRP(N)1

8 to 1 Selector

In the 8 to 1 selector, a reference voltage VIN can be selected from the levels which are generated by the ladder resistors. There are six types of reference voltage (VIN1 to VIN6) and totally 48 divided voltages can be selected in one ladder resistor. Following figure explains the relationship between the micro adjusting register and the selecting voltage.

Positive polarity							Negative polarity						
Register PKP[2:0]	Selected voltage						Register PKN[2:0]	Selected voltage					
	VINP1	VINP2	VINP3	VINP4	VINP5	VINP6		VINN1	VINN2	VINN3	VINN4	VINN5	VINN6
000	KVP1	KVP9	KVP17	KVP25	KVP33	KVP41	000	KVN1	KVN9	KVN17	KVN25	KVN33	KVN41
001	KVP2	KVP10	KVP18	KVP26	KVP34	KVP42	001	KVN2	KVN10	KVN18	KVN26	KVN34	KVN42
010	KVP3	KVP11	KVP19	KVP27	KVP35	KVP43	010	KVN3	KVN11	KVN19	KVN27	KVN35	KVN43
011	KVP4	KVP12	KVP20	KVP28	KVP36	KVP44	011	KVN4	KVN12	KVN20	KVN28	KVN36	KVN44
100	KVP5	KVP13	KVP21	KVP29	KVP37	KVP45	100	KVN5	KVN13	KVN21	KVN29	KVN37	KVN45
101	KVP6	KVP14	KVP22	KVP30	KVP38	KVP46	101	KVN6	KVN14	KVN22	KVN30	KVN38	KVN46
110	KVP7	KVP15	KVP23	KVP31	KVP39	KVP47	110	KVN7	KVN15	KVN23	KVN31	KVN39	KVN47
111	KVP8	KVP16	KVP24	KVP32	KVP40	KVP48	111	KVN8	KVN16	KVN24	KVN32	KVN40	KVN48

Table 9. 4 PKP and PKN

Himax Confidential
Reference only
Do not copy

Grayscale voltage	Positive Polarity	Negative Polarity
V0	VINP0	VINN7
V1	VINP1	VINN6
V2	V8+(V1-V8)*(2241/2703)	V1+(V8-V1)*(462/2703)
V3	V8+(V1-V8)*(1671/2703)	V1+(V8-V1)*(1032/2703)
V4	V8+(V1-V8)*(1209/2703)	V1+(V8-V1)*(1494/2703)
V5	V8+(V1-V8)*(849/2703)	V1+(V8-V1)*(1854/2703)
V6	V8+(V1-V8)*(567/2703)	V1+(V8-V1)*(2136/2703)
V7	V8+(V1-V8)*(294/2703)	V1+(V8-V1)*(2409/2703)
V8	VINP2	VINN5
V9	V20+(V8-V20)*(1533/1767)	V8+(V20-V8)*(234/1767)
V10	V20+(V8-V20)*(1356/1767)	V8+(V20-V8)*(411/1767)
V11	V20+(V8-V20)*(1188/1767)	V8+(V20-V8)*(579/1767)
V12	V20+(V8-V20)*(993/1767)	V8+(V20-V8)*(774/1767)
V13	V20+(V8-V20)*(843/1767)	V8+(V20-V8)*(924/1767)
V14	V20+(V8-V20)*(693/1767)	V8+(V20-V8)*(1074/1767)
V15	V20+(V8-V20)*(543/1767)	V8+(V20-V8)*(1224/1767)
V16	V20+(V8-V20)*(441/1767)	V8+(V20-V8)*(1326/1767)
V17	V20+(V8-V20)*(336/1767)	V8+(V20-V8)*(1431/1767)
V18	V20+(V8-V20)*(213/1767)	V8+(V20-V8)*(1554/1767)
V19	V20+(V8-V20)*(81/1767)	V8+(V20-V8)*(1686/1767)
V20	VINP3	VINN4
V21	V43+(V20-V43)*(1887/1965)	V20+(V43-V20)*(78/1965)
V22	V43+(V20-V43)*(1779/1965)	V20+(V43-V20)*(186/1965)
V23	V43+(V20-V43)*(1653/1965)	V20+(V43-V20)*(312/1965)
V24	V43+(V20-V43)*(1536/1965)	V20+(V43-V20)*(429/1965)
V25	V43+(V20-V43)*(1437/1965)	V20+(V43-V20)*(528/1965)
V26	V43+(V20-V43)*(1362/1965)	V20+(V43-V20)*(603/1965)
V27	V43+(V20-V43)*(1278/1965)	V20+(V43-V20)*(687/1965)
V28	V43+(V20-V43)*(1191/1965)	V20+(V43-V20)*(774/1965)
V29	V43+(V20-V43)*(1098/1965)	V20+(V43-V20)*(867/1965)
V30	V43+(V20-V43)*(1008/1965)	V20+(V43-V20)*(957/1965)
V31	V43+(V20-V43)*(927/1965)	V20+(V43-V20)*(1038/1965)
V32	V43+(V20-V43)*(843/1965)	V20+(V43-V20)*(1122/1965)
V33	V43+(V20-V43)*(750/1965)	V20+(V43-V20)*(1215/1965)
V34	V43+(V20-V43)*(678/1965)	V20+(V43-V20)*(1287/1965)
V35	V43+(V20-V43)*(612/1965)	V20+(V43-V20)*(1353/1965)
V36	V43+(V20-V43)*(528/1965)	V20+(V43-V20)*(1437/1965)
V37	V43+(V20-V43)*(450/1965)	V20+(V43-V20)*(1515/1965)
V38	V43+(V20-V43)*(375/1965)	V20+(V43-V20)*(1590/1965)
V39	V43+(V20-V43)*(303/1965)	V20+(V43-V20)*(1662/1965)
V40	V43+(V20-V43)*(222/1965)	V20+(V43-V20)*(1743/1965)
V41	V43+(V20-V43)*(147/1965)	V20+(V43-V20)*(1818/1965)
V42	V43+(V20-V43)*(87/1965)	V20+(V43-V20)*(1878/1965)
V43	VINP4	VINN3
V44	V55+(V43-V55)*(936/1014)	V43+(V55-V43)*(78/1014)
V45	V55+(V43-V55)*(867/1014)	V43+(V55-V43)*(147/1014)
V46	V55+(V43-V55)*(792/1014)	V43+(V55-V43)*(222/1014)
V47	V55+(V43-V55)*(723/1014)	V43+(V55-V43)*(291/1014)
V48	V55+(V43-V55)*(648/1014)	V43+(V55-V43)*(366/1014)
V49	V55+(V43-V55)*(561/1014)	V43+(V55-V43)*(453/1014)
V50	V55+(V43-V55)*(465/1014)	V43+(V55-V43)*(549/1014)
V51	V55+(V43-V55)*(387/1014)	V43+(V55-V43)*(627/1014)
V52	V55+(V43-V55)*(291/1014)	V43+(V55-V43)*(723/1014)
V53	V55+(V43-V55)*(201/1014)	V43+(V55-V43)*(813/1014)
V54	V55+(V43-V55)*(111/1014)	V43+(V55-V43)*(903/1014)
V55	VINP5	VINN2
V56	V62+(V55-V62)*(1218/1317)	V55+(V62-V55)*(99/1317)
V57	V62+(V55-V62)*(1092/1317)	V55+(V62-V55)*(225/1317)
V58	V62+(V55-V62)*(936/1317)	V55+(V62-V55)*(381/1317)
V59	V62+(V55-V62)*(774/1317)	V55+(V62-V55)*(543/1317)
V60	V62+(V55-V62)*(579/1317)	V55+(V62-V55)*(738/1317)
V61	V62+(V55-V62)*(324/1317)	V55+(V62-V55)*(993/1317)
V62	VINP6	VINN1
V63	VINP7	VINN0

Table 9. 5 Grayscale Voltages Formulas

Himax Confidential
For Tpulux Only
Not Copy

Reference	Formula	Micro-adjusting register	Reference voltage
KVP0	VLCD63 - ΔV x VRP0 / SUMRP	-	VINP0
KVP1	VLCD63 - ΔV x (VRP0 + 5R) / SUMRP	PKP0[2:0] = "000"	VINP1
KVP2	VLCD63 - ΔV x (VRP0 + 9R) / SUMRP	PKP0[2:0] = "001"	
KVP3	VLCD63 - ΔV x (VRP0 + 13R) / SUMRP	PKP0[2:0] = "010"	
KVP4	VLCD63 - ΔV x (VRP0 + 17R) / SUMRP	PKP0[2:0] = "011"	
KVP5	VLCD63 - ΔV x (VRP0 + 21R) / SUMRP	PKP0[2:0] = "100"	
KVP6	VLCD63 - ΔV x (VRP0 + 25R) / SUMRP	PKP0[2:0] = "101"	
KVP7	VLCD63 - ΔV x (VRP0 + 29R) / SUMRP	PKP0[2:0] = "110"	
KVP8	VLCD63 - ΔV x (VRP0 + 33R) / SUMRP	PKP0[2:0] = "111"	
KVP9	VLCD63 - ΔV x (VRP0 + 33R + VRHP) / SUMRP	PKP1[2:0] = "000"	VINP2
KVP10	VLCD63 - ΔV x (VRP0 + 34R + VRHP) / SUMRP	PKP1[2:0] = "001"	
KVP11	VLCD63 - ΔV x (VRP0 + 35R + VRHP) / SUMRP	PKP1[2:0] = "010"	
KVP12	VLCD63 - ΔV x (VRP0 + 36R + VRHP) / SUMRP	PKP1[2:0] = "011"	
KVP13	VLCD63 - ΔV x (VRP0 + 37R + VRHP) / SUMRP	PKP1[2:0] = "100"	
KVP14	VLCD63 - ΔV x (VRP0 + 38R + VRHP) / SUMRP	PKP1[2:0] = "101"	
KVP15	VLCD63 - ΔV x (VRP0 + 39R + VRHP) / SUMRP	PKP1[2:0] = "110"	
KVP16	VLCD63 - ΔV x (VRP0 + 40R + VRHP) / SUMRP	PKP1[2:0] = "111"	
KVP17	VLCD63 - ΔV x (VRP0 + 45R + VRHP) / SUMRP	PKP2[2:0] = "000"	VINP3
KVP18	VLCD63 - ΔV x (VRP0 + 46R + VRHP) / SUMRP	PKP2[2:0] = "001"	
KVP19	VLCD63 - ΔV x (VRP0 + 47R + VRHP) / SUMRP	PKP2[2:0] = "010"	
KVP20	VLCD63 - ΔV x (VRP0 + 48R + VRHP) / SUMRP	PKP2[2:0] = "011"	
KVP21	VLCD63 - ΔV x (VRP0 + 49R + VRHP) / SUMRP	PKP2[2:0] = "100"	
KVP22	VLCD63 - ΔV x (VRP0 + 50R + VRHP) / SUMRP	PKP2[2:0] = "101"	
KVP23	VLCD63 - ΔV x (VRP0 + 51R + VRHP) / SUMRP	PKP2[2:0] = "110"	
KVP24	VLCD63 - ΔV x (VRP0 + 52R + VRHP) / SUMRP	PKP2[2:0] = "111"	
KVP25	VLCD63 - ΔV x (VRP0 + 68R + VRHP) / SUMRP	PKP3[2:0] = "000"	VINP4
KVP26	VLCD63 - ΔV x (VRP0 + 69R + VRHP) / SUMRP	PKP3[2:0] = "001"	
KVP27	VLCD63 - ΔV x (VRP0 + 70R + VRHP) / SUMRP	PKP3[2:0] = "010"	
KVP28	VLCD63 - ΔV x (VRP0 + 71R + VRHP) / SUMRP	PKP3[2:0] = "011"	
KVP29	VLCD63 - ΔV x (VRP0 + 72R + VRHP) / SUMRP	PKP3[2:0] = "100"	
KVP30	VLCD63 - ΔV x (VRP0 + 73R + VRHP) / SUMRP	PKP3[2:0] = "101"	
KVP31	VLCD63 - ΔV x (VRP0 + 74R + VRHP) / SUMRP	PKP3[2:0] = "110"	
KVP32	VLCD63 - ΔV x (VRP0 + 75R + VRHP) / SUMRP	PKP3[2:0] = "111"	
KVP33	VLCD63 - ΔV x (VRP0 + 80R + VRHP) / SUMRP	PKP4[2:0] = "000"	VINP5
KVP34	VLCD63 - ΔV x (VRP0 + 81R + VRHP) / SUMRP	PKP4[2:0] = "001"	
KVP35	VLCD63 - ΔV x (VRP0 + 82R + VRHP) / SUMRP	PKP4[2:0] = "010"	
KVP36	VLCD63 - ΔV x (VRP0 + 83R + VRHP) / SUMRP	PKP4[2:0] = "011"	
KVP37	VLCD63 - ΔV x (VRP0 + 84R + VRHP) / SUMRP	PKP4[2:0] = "100"	
KVP38	VLCD63 - ΔV x (VRP0 + 85R + VRHP) / SUMRP	PKP4[2:0] = "101"	
KVP39	VLCD63 - ΔV x (VRP0 + 86R + VRHP) / SUMRP	PKP4[2:0] = "110"	
KVP40	VLCD63 - ΔV x (VRP0 + 87R + VRHP) / SUMRP	PKP4[2:0] = "111"	
KVP41	VLCD63 - ΔV x (VRP0 + 87R + VRHP + VRLP) / SUMRP	PKP5[2:0] = "000"	VINP6
KVP42	VLCD63 - ΔV x (VRP0 + 91R + VRHP + VRLP) / SUMRP	PKP5[2:0] = "001"	
KVP43	VLCD63 - ΔV x (VRP0 + 95R + VRHP + VRLP) / SUMRP	PKP5[2:0] = "010"	
KVP44	VLCD63 - ΔV x (VRP0 + 99R + VRHP + VRLP) / SUMRP	PKP5[2:0] = "011"	
KVP45	VLCD63 - ΔV x (VRP0 + 103R + VRHP + VRLP) / SUMRP	PKP5[2:0] = "100"	
KVP46	VLCD63 - ΔV x (VRP0 + 107R + VRHP + VRLP) / SUMRP	PKP5[2:0] = "101"	
KVP47	VLCD63 - ΔV x (VRP0 + 111R + VRHP + VRLP) / SUMRP	PKP5[2:0] = "110"	
KVP48	VLCD63 - ΔV x (VRP0 + 115R + VRHP + VRLP) / SUMRP	PKP5[2:0] = "111"	
KVP49	VLCD63 - ΔV x (VRP0 + 120R + VRHP + VRLP) / SUMRP	-	VINP7

SUMRP: Total of the positive polarity ladder resistance = 128R + VRHP + VRLP + VRP0 + VRP1
ΔV: Voltage difference between VLCD63 and of EXVR.

Table 9. 6 Reference Voltages of Positive Polarity

Preliminary Draft Confidential
For Reference Only
Do Not Copy

Reference	Formula	Micro-adjusting register	Reference voltage
KVN0	VLCD63 - ΔV x VRN0 / SUMRN	-	VINN0
KVN1	VLCD63 - ΔV x (VRN0 + 5R) / SUMRN	PKN0[2:0] = "000"	VINN1
KVN2	VLCD63 - ΔV x (VRN0 + 9R) / SUMRN	PKN0[2:0] = "001"	
KVN3	VLCD63 - ΔV x (VRN0 + 13R) / SUMRN	PKN0[2:0] = "010"	
KVN4	VLCD63 - ΔV x (VRN0 + 17R) / SUMRN	PKN0[2:0] = "011"	
KVN5	VLCD63 - ΔV x (VRN0 + 21R) / SUMRN	PKN0[2:0] = "100"	
KVN6	VLCD63 - ΔV x (VRN0 + 25R) / SUMRN	PKN0[2:0] = "101"	
KVN7	VLCD63 - ΔV x (VRN0 + 29R) / SUMRN	PKN0[2:0] = "110"	
KVN8	VLCD63 - ΔV x (VRN0 + 33R) / SUMRN	PKN0[2:0] = "111"	
KVN9	VLCD63 - ΔV x (VRN0 + 33R + VRHN) / SUMRN	PKN1[2:0] = "000"	VINN2
KVN10	VLCD63 - ΔV x (VRN0 + 34R + VRHN) / SUMRN	PKN1[2:0] = "001"	
KVN11	VLCD63 - ΔV x (VRN0 + 35R + VRHN) / SUMRN	PKN1[2:0] = "010"	
KVN12	VLCD63 - ΔV x (VRN0 + 36R + VRHN) / SUMRN	PKN1[2:0] = "011"	
KVN13	VLCD63 - ΔV x (VRN0 + 37R + VRHN) / SUMRN	PKN1[2:0] = "100"	
KVN14	VLCD63 - ΔV x (VRN0 + 38R + VRHN) / SUMRN	PKN1[2:0] = "101"	
KVN15	VLCD63 - ΔV x (VRN0 + 39R + VRHN) / SUMRN	PKN1[2:0] = "110"	
KVN16	VLCD63 - ΔV x (VRN0 + 40R + VRHN) / SUMRN	PKN1[2:0] = "111"	
KVN17	VLCD63 - ΔV x (VRN0 + 45R + VRHN) / SUMRN	PKN2[2:0] = "000"	VINN3
KVN18	VLCD63 - ΔV x (VRN0 + 46R + VRHN) / SUMRN	PKN2[2:0] = "001"	
KVN19	VLCD63 - ΔV x (VRN0 + 47R + VRHN) / SUMRN	PKN2[2:0] = "010"	
KVN20	VLCD63 - ΔV x (VRN0 + 48R + VRHN) / SUMRN	PKN2[2:0] = "011"	
KVN21	VLCD63 - ΔV x (VRN0 + 49R + VRHN) / SUMRN	PKN2[2:0] = "100"	
KVN22	VLCD63 - ΔV x (VRN0 + 50R + VRHN) / SUMRN	PKN2[2:0] = "101"	
KVN23	VLCD63 - ΔV x (VRN0 + 51R + VRHN) / SUMRN	PKN2[2:0] = "110"	
KVN24	VLCD63 - ΔV x (VRN0 + 52R + VRHN) / SUMRN	PKN2[2:0] = "111"	
KVN25	VLCD63 - ΔV x (VRN0 + 68R + VRHN) / SUMRN	PKN3[2:0] = "000"	VINN4
KVN26	VLCD63 - ΔV x (VRN0 + 69R + VRHN) / SUMRN	PKN3[2:0] = "001"	
KVN27	VLCD63 - ΔV x (VRN0 + 70R + VRHN) / SUMRN	PKN3[2:0] = "010"	
KVN28	VLCD63 - ΔV x (VRN0 + 71R + VRHN) / SUMRN	PKN3[2:0] = "011"	
KVN29	VLCD63 - ΔV x (VRN0 + 72R + VRHN) / SUMRN	PKN3[2:0] = "100"	
KVN30	VLCD63 - ΔV x (VRN0 + 73R + VRHN) / SUMRN	PKN3[2:0] = "101"	
KVN31	VLCD63 - ΔV x (VRN0 + 74R + VRHN) / SUMRN	PKN3[2:0] = "110"	
KVN32	VLCD63 - ΔV x (VRN0 + 75R + VRHN) / SUMRN	PKN3[2:0] = "111"	
KVN33	VLCD63 - ΔV x (VRN0 + 80R + VRHN) / SUMRN	PKN4[2:0] = "000"	VINN5
KVN34	VLCD63 - ΔV x (VRN0 + 81R + VRHN) / SUMRN	PKN4[2:0] = "001"	
KVN35	VLCD63 - ΔV x (VRN0 + 82R + VRHN) / SUMRN	PKN4[2:0] = "010"	
KVN36	VLCD63 - ΔV x (VRN0 + 83R + VRHN) / SUMRN	PKN4[2:0] = "011"	
KVN37	VLCD63 - ΔV x (VRN0 + 84R + VRHN) / SUMRN	PKN4[2:0] = "100"	
KVN38	VLCD63 - ΔV x (VRN0 + 85R + VRHN) / SUMRN	PKN4[2:0] = "101"	
KVN39	VLCD63 - ΔV x (VRN0 + 86R + VRHN) / SUMRN	PKN4[2:0] = "110"	
KVN40	VLCD63 - ΔV x (VRN0 + 87R + VRHN) / SUMRN	PKN4[2:0] = "111"	
KVN41	VLCD63 - ΔV x (VRN0 + 87R + VRHN + VRLN) / SUMRN	PKN5[2:0] = "000"	VINN6
KVN42	VLCD63 - ΔV x (VRN0 + 91R + VRHN + VRLN) / SUMRN	PKN5[2:0] = "001"	
KVN43	VLCD63 - ΔV x (VRN0 + 95R + VRHN + VRLN) / SUMRN	PKN5[2:0] = "010"	
KVN44	VLCD63 - ΔV x (VRN0 + 99R + VRHN + VRLN) / SUMRN	PKN5[2:0] = "011"	
KVN45	VLCD63 - ΔV x (VRN0 + 103R + VRHN + VRLN) / SUMRN	PKN5[2:0] = "100"	
KVN46	VLCD63 - ΔV x (VRN0 + 107R + VRHN + VRLN) / SUMRN	PKN5[2:0] = "101"	
KVN47	VLCD63 - ΔV x (VRN0 + 111R + VRHN + VRLN) / SUMRN	PKN5[2:0] = "110"	
KVN48	VLCD63 - ΔV x (VRN0 + 115R + VRHN + VRLN) / SUMRN	PKN5[2:0] = "111"	
KVN49	VLCD63 - ΔV x (VRN0 + 120R + VRHN + VRLN) / SUMRN	-	VINN7

SUMRN: Total of the negative polarity ladder resistance = 128R + VRHN + VRLN + VRN0 + VRN1
ΔV: Voltage difference between VLCD63 and of EXVR.

Table 9. 7 Reference Voltages of Negative Polarity

Internal Confidential Information Only Do Not Copy

10. Maximum Rating

Maximum Ratings (Voltage Referenced to VSS)

Symbol	Parameter	Value	Unit
VDD	Supply Voltage	-0.3 to +2.7	V
VDDIO		-0.3 to +4.0	V
VCI	Input Voltage	VSS - 0.3 to 5.0	V
I	Current Drain Per Pin Excluding VDD and VSS	25	mA
TA	Operating Temperature	-30 to +85	℃
Tstg	Storage Temperature	-65 to +150	℃
Ron	Input Resistance	TBD	Ω

Table 10. 1 Maximum Ratings

Maximum ratings are those values beyond which damages to the device may occur. Functional operation should be restricted to the limits in the Electrical Characteristics tables or Pin Description section.

This device contains circuitry to protect the inputs against damage due to high static voltages or electric fields; however, it is advised that normal precautions to be taken to avoid application of any voltage higher than maximum rated voltages to this high impedance circuit. For proper operation it is recommended that VCI and VOUT be constrained to the range VSS < VDDIO ≤VCI < VOUT.

Reliability of operation is enhanced if unused input is connected to an appropriate logic voltage level (e.g., either VSS or VDDIO).

Unused outputs must be left open. This device may be light sensitive. Caution should be taken to avoid exposure of this device to any light source during normal operation. This device is not radiation protected.

Himax Confidential
For Innolux Only
Do Not Copy

11. DC Characteristics

DC Characteristics

(Unless otherwise specified, Voltage Referenced to V_{SS}, V_{DDIO} = 2.2V, T_A = 25℃)

Symbol	Parameter	Test condition	Min.	Typ.	Max.	Unit
V_{DD}	System power supply pins of the logic block	Recommend Operating Voltage Possible Operating Voltage	1.8	-	2.50	V
V_{DDIO}	Power supply pin of IO pins	Recommend Operating Voltage Possible Operating Voltage	1.8	-	3.6	V
V_{CI}	Booster Reference Supply Voltage Range	Recommend Operating Voltage Possible Operating Voltage	2.5 or VDDIO	-	3.6	V
I_{sleep}	Sleep mode current			50		μA
I_{dp}	Operating mode current	VCI=3.3V		10	12	mA
V_{CIM}	Negative V_{CI} Output Voltage	No panel loading	- VCI	-	- VCI+0.7	V
V_{CIX2}	V_{CIX2} primary booster efficiency(1)	No panel loading, ITO for V_{CIX2}, V_{CI} and V_{CHS} = 10 Ohm	83	90	-	%
V_{GH}	Gate driver High Output Voltage Booster efficiency(2)	No panel loading; 4x booster; ITO for C_{YP}, C_{YN}, V_{CIX2}, V_{CI} and V_{CHS} = 10 Ohm	84	89.5	-	%
		No panel loading; 5x booster; ITO for C_{YP}, C_{YN}, V_{CIX2}, V_{CI} and V_{CHS} = 10 Ohm	80	88.5	-	%
		No panel loading; 6x booster; ITO for C_{YP}, C_{YN}, V_{CIX2}, V_{CI} and V_{CHS} = 10 Ohm	72	80	-	%
V_{GL}	Gate driver Low Output Voltage	-	- V_{GH}		-5.1	V
V_{COMH}	VCOM High Output Voltage	-	-	-	5.54	V
V_{COML}	VCOM Low Output Voltage	-	V_{CIM}+0.5	-	-	V
V_{COMA}	VCOM Amplitude	-	-	-	6	V
V_{LCD63}	V_{LCD63} Output Voltage	-	-	-	5.57	V
△V_{LCD63}	Max. Source Voltage Variation	-	-2	-	2	%
V_{OH1}	Logic High Output Voltage	I out = -100μA	0.9V_{DDIO}	-	V_{DD}	V
V_{VD}	Source Output Voltage Deviation	-	-	±20	-	mV
V_{OS}	Source Output Voltage Offset	-	-	-	±30	mV
V_{OL1}	Logic Low Output Voltage	I out = 100μA	0	-	0.1V_{DDIO}	V
V_{IH1}	Logic High Input voltage	-	0.8V_{DDIO}	-	V_{DDIO}	V
V_{IL1}	Logic Low Input voltage	-	0	-	0.2V_{DDIO}	V
I_{OH}	Logic High Output Current Source	V out = VDD – 0.4V	50	-	-	μA
I_{OL}	Logic Low Output Current Drain	V out = 0.4V	-	-	-50	μA
I_{OZ}	Logic Output Tri-state Current Drain Source	-	-1	-	1	μA
$I_{IL/IIH}$	Logic Input Current	-	-1	-	1	μA
C_{IN}	Logic Pins Input Capacitance	-	-	5	7.5	pF
R_{SON}	Source drivers output resistance	-	-	1	-	kΩ
R_{GON}	Gate drivers output resistance	-	-	500	-	Ω
R_{CON}	VCOM output resistance	-	-	200	-	Ω

Note : (1) VCIX2 efficiency = VCIX2 / (2 x VCI) x 100%
(2) VGH efficiency = VGH / (VCI x n) x 100% (where n = booster factor)

Table 11. 1 DC Characteristics

Himax Confidential
For Innolux Only
Do Not Copy

This information contained herein is the exclusive property of Himax and shell not be distributed, reproduced, or disclosed in whole or in part without prior written permission of Himax.

12. AC Characteristics

AC Characteristics

(Unless otherwise specified, Voltage Referenced to V_{SS}, V_{DDIO} = 2.2V, T_A = 25℃)

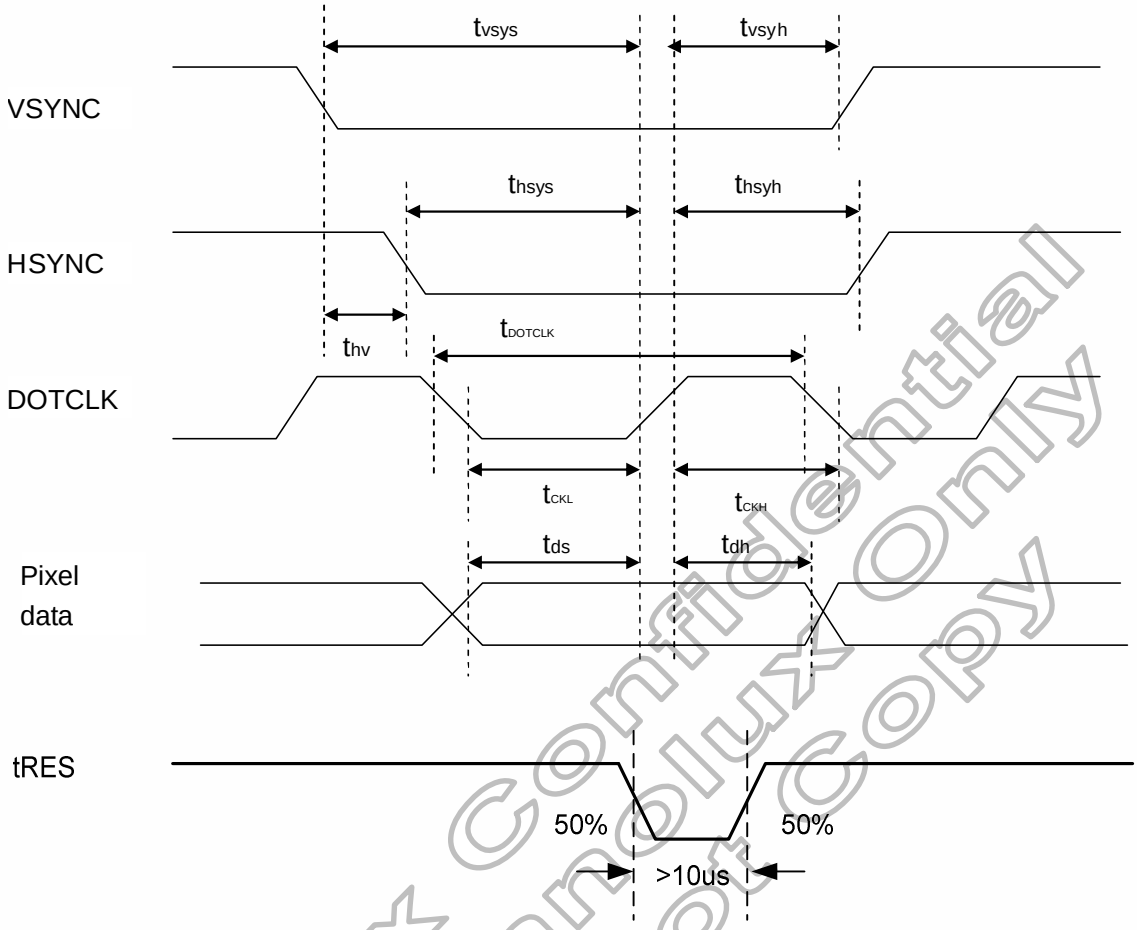

Figure 12. 1 Pixel Timing

Characteristics	Symbol	Min.		Typ.		Max.		Unit
		24 bit	8 bit	24 bit	8 bit	24 bit	8 bit	
DOTCLK Frequency	fDOTCLK	-	-	6.5	19.5	10	30	MHz
DOTCLK Period	tDOTCLK	100	33.3	154	51.3	-	-	ns
Vertical Sync Setup Time	tvsys	20	10	-	-	-	-	ns
Vertical Sync Hold Time	tvsyh	20	10	-	-	-	-	ns
Horizontal Sync Setup Time	thsys	20	10	-	-	-	-	ns
Horizontal Sync Hold Time	thsyh	20	10	-	-	-	-	ns
Phase difference of Sync Signal Falling Edge	thv	1		-		240		tDOTCLK
DOTCLK Low Period	tCKL	50	15	-	-	-	-	ns
DOTCLK High Period	tCKH	50	15	-	-	-	-	ns
Data Setup Time	tds	12	10	-	-	-	-	ns
Data hold Time	tdh	12	10	-	-	-	-	ns
Reset pulse width	tRES	10		-		-		us

Note: External clock source must be provided to DOTCLK pin of HX8238-D. The driver will not operate if absent of the clocking signal.

Table 12. 1 Pixel Timing

Himax Confidential
For Innolux Only
Not Copy

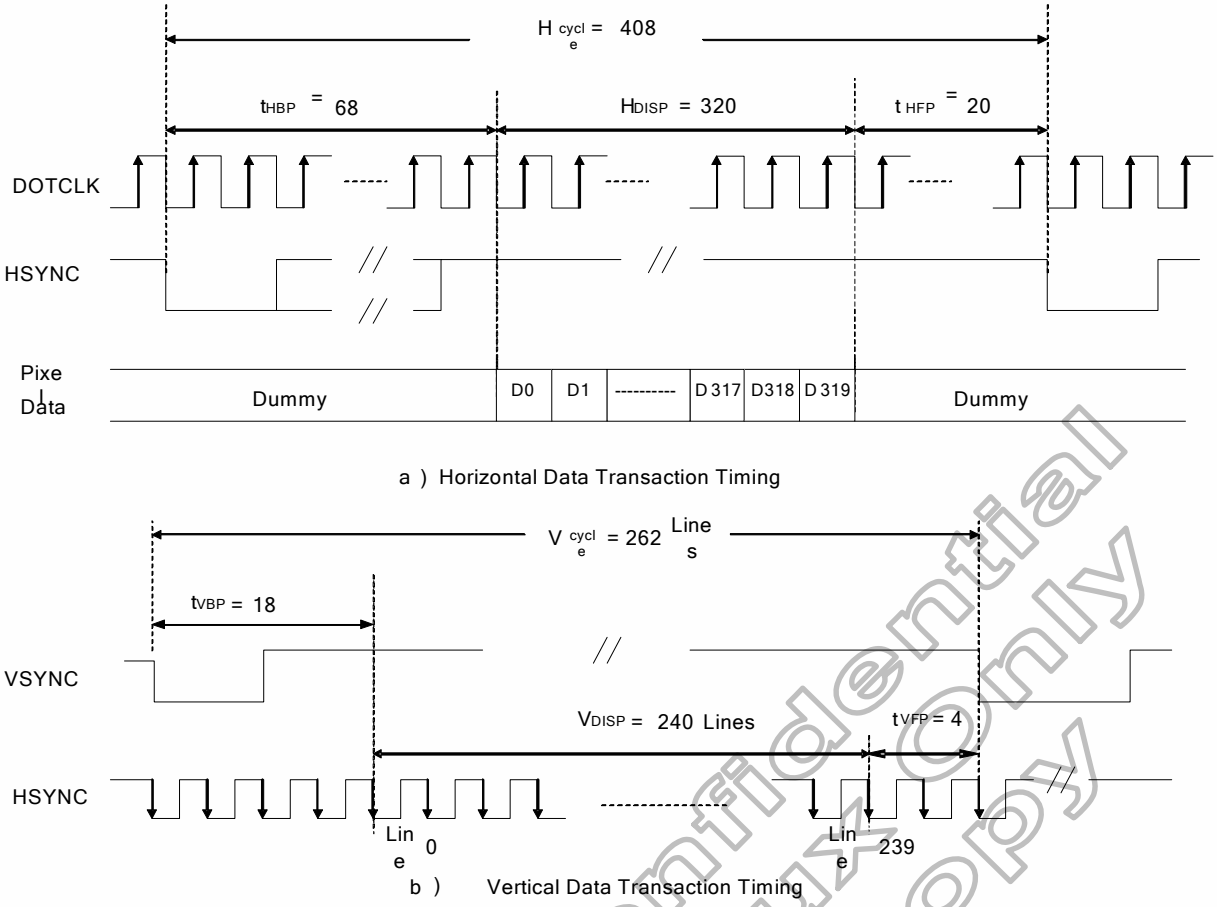

Figure 12. 2 Data Transaction Timing in Parallel RGB (24 bit) Interface (SYNC Mode)

Characteristics		Symbol	Min-		Typ.		Max.		Unit
			24 bit	8 bit	24 bit	8 bit	24 bit	8 bit	
DOTCLK Frequency		fDOTCLK	-	-	6.5	19.5	10	30	MHz
DOTCLK Period		tDOTCLK	100	33.3	154	51.3	-	-	ns
Horizontal Frequency (Line)		fH	-		14.9		22.35		KHz
Vertical Frequency (Refresh)		fV	-		60		90		Hz
Horizontal Back Porch		tHBP	-	-	68	204	-	-	tDOTCLK
Horizontal Front Porch		tHFP	-	-	20	60	-	-	tDOTCLK
Horizontal Data Start Point		tHBP	-	-	68	204	-	-	tDOTCLK
Horizontal Blanking Period		tHBP + tHFP	-	-	88	264	-	-	tDOTCLK
Horizontal Display Area		HDISP	-	-	320	960	-	-	tDOTCLK
Horizontal Cycle		Hcycle	-	-	408	1224	450	1350	tDOTCLK
Vertical Back Porch		tVBP	-		18		-		Lines
Vertical Front Porch		tVFP	-		4		-		Lines
Vertical Data Start Point		tVBP	-		18		-		Lines
Vertical Blanking Period		tVBP + tVFP	-		22		-		Lines
Vertical Display Area	NTSC	VDISP	-		240		-		Lines
	PAL				280(PALM=0)				
					288(PALM=1)				
Vertical Cycle	NTSC	Vcycle	-		262		350		Lines
	PAL				313				

Table 12. 2 Data Transaction Timing in Normal Operating Mode

Himax Confidential
For Internal Use Only
Do Not Copy

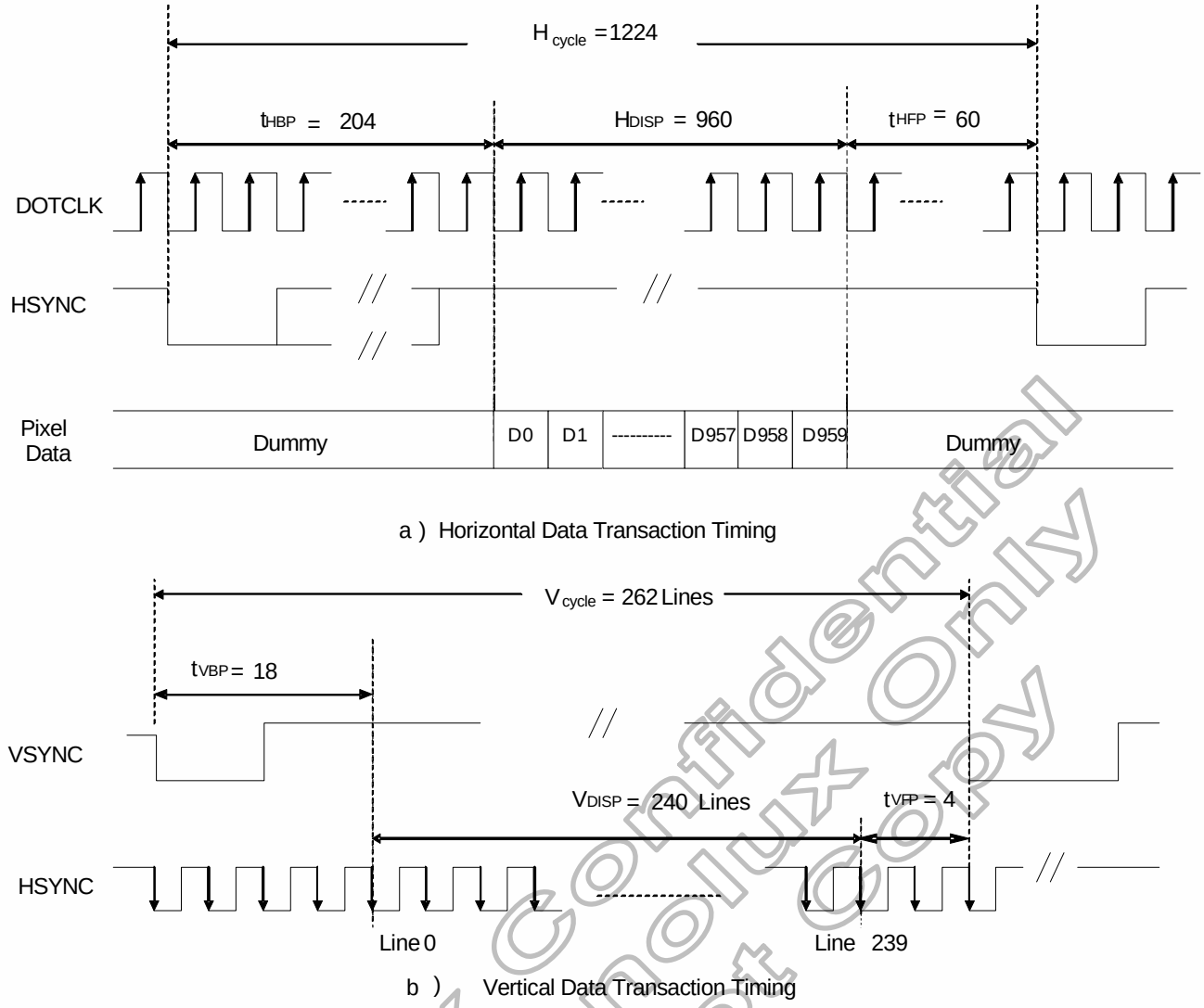

Figure 12. 3 Data Transaction Timing in Serial RGB (8 bit) Interface (SYNC Mode)

Himax Confidential
For Innolux Only
Do Not Copy

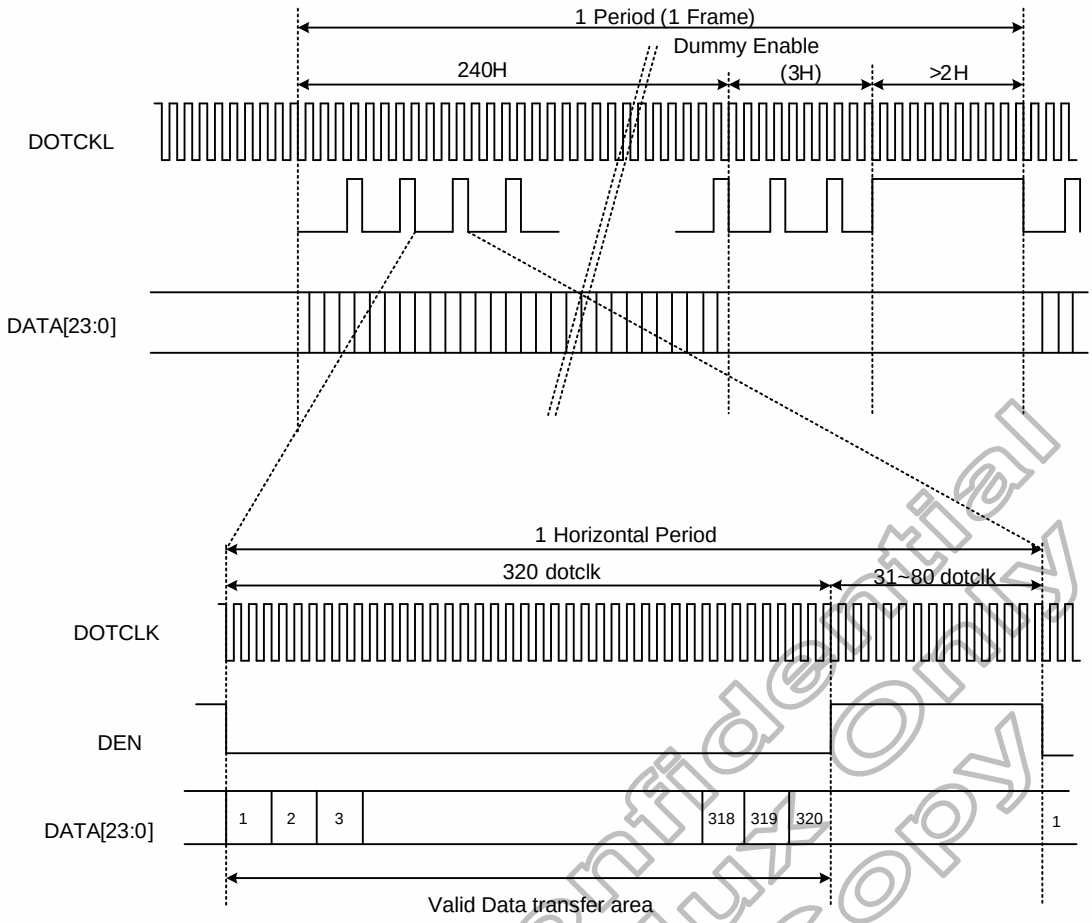

Figure 12. 4 Signal Timing in DE Mode

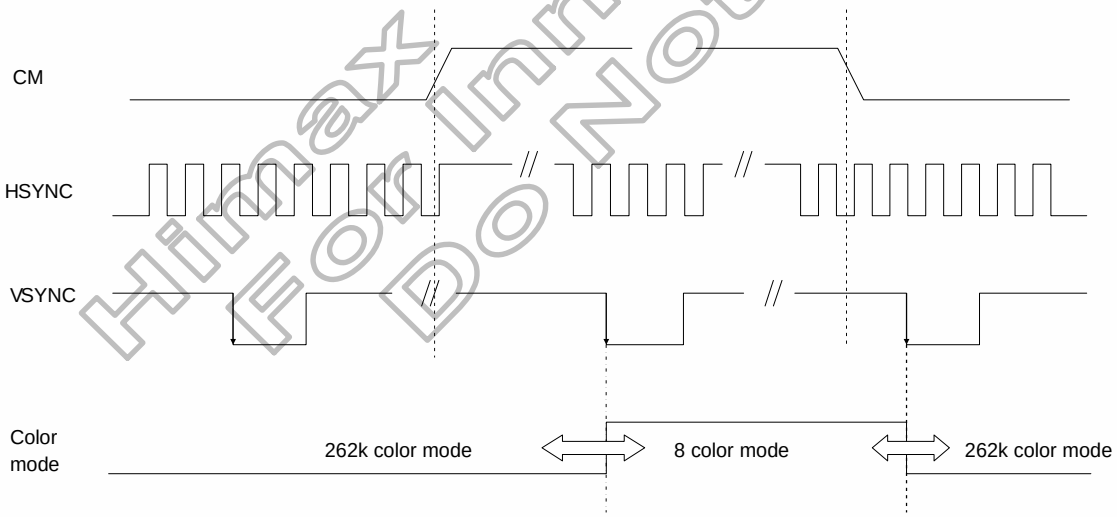

Note: The color mode conversion starts at the first falling edge of VSYNC after stage change of CM.

Figure 12. 5 Color Mode Conversion Timing

Himax Confidential
For Innolux Only
Do Not Copy

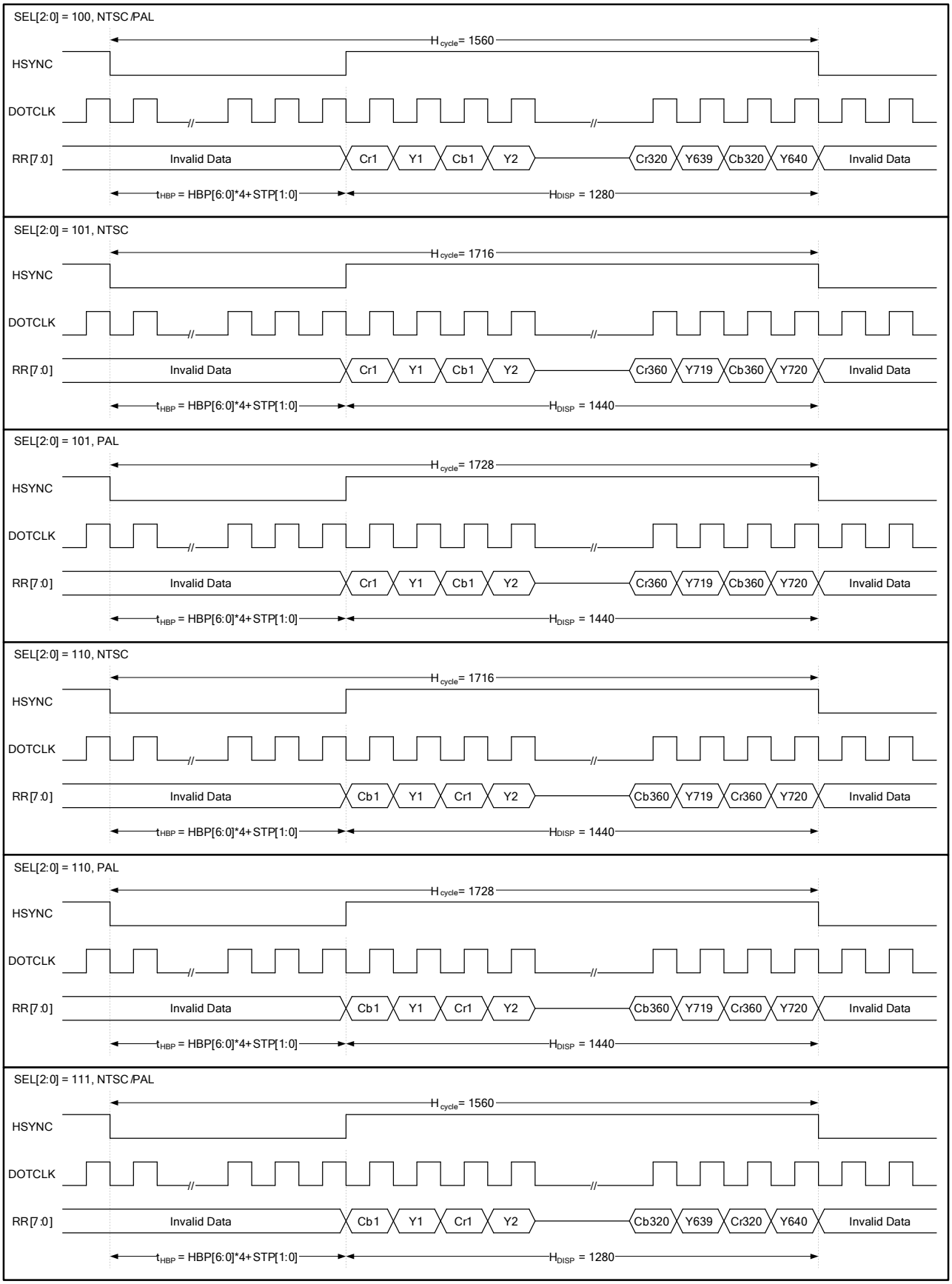

Figure 12. 6 CCIR601 Horizontal Timing

This information contained herein is the exclusive property of Himax and shell not be distributed, reproduced, or disclosed in whole or in part without prior written permission of Himax.

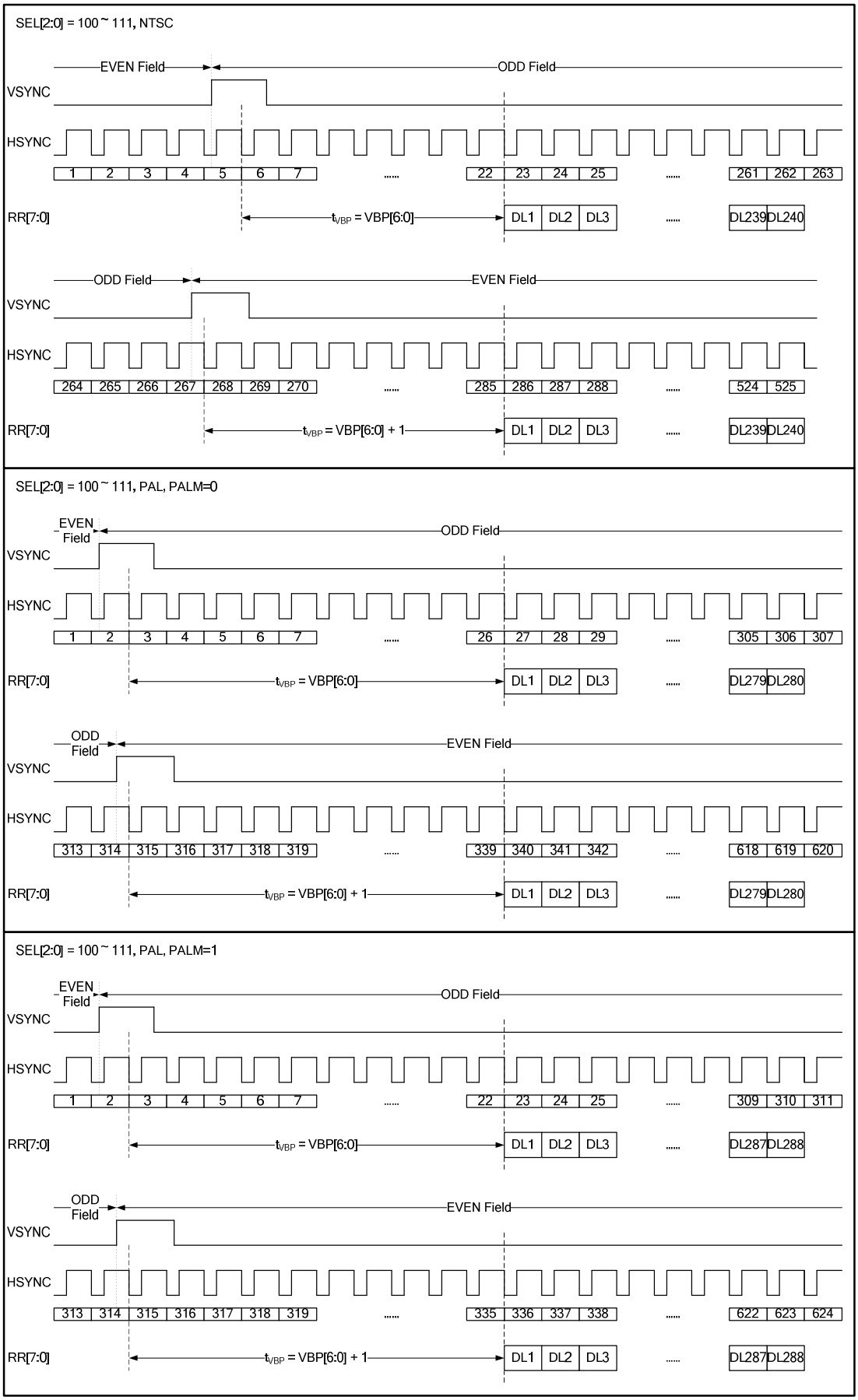

Figure 12. 7 CCIR601 Vertical Timing

This information contained herein is the exclusive property of Himax and shell not be distributed, reproduced, or disclosed in whole or in part without prior written permission of Himax.

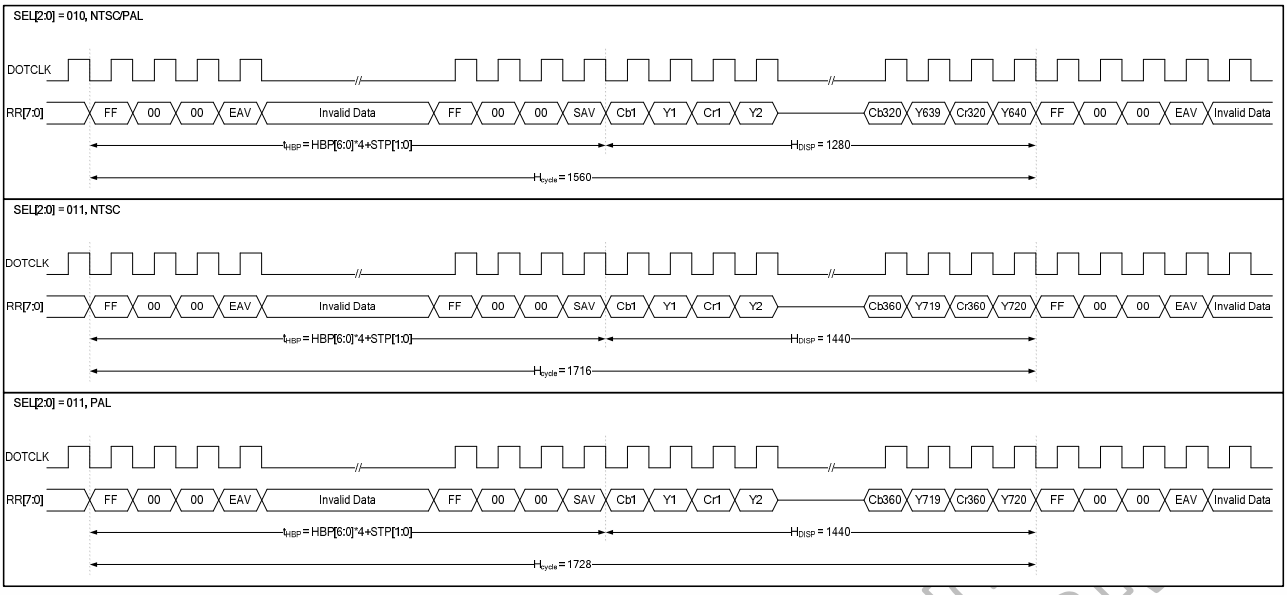

Figure 12. 8 CCIR656 Horizontal Timing

Himax Confidential
For Innolux Only
Do Not Copy

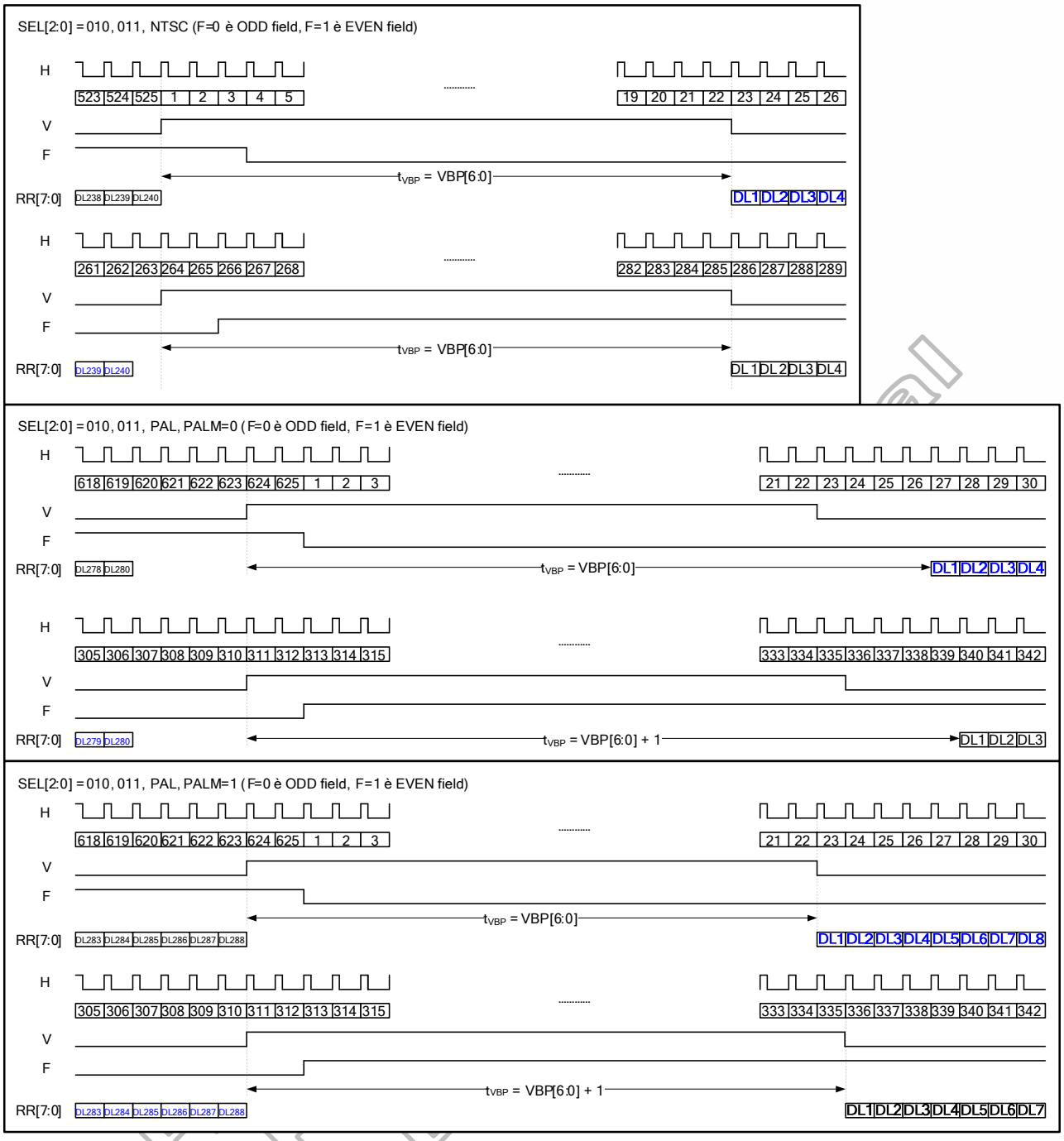

Figure 12. 9 CCIR656 Vertical Timing

This information contained herein is the exclusive property of Himax and shell not be distributed, reproduced, or disclosed in whole or in part without prior written permission of Himax.

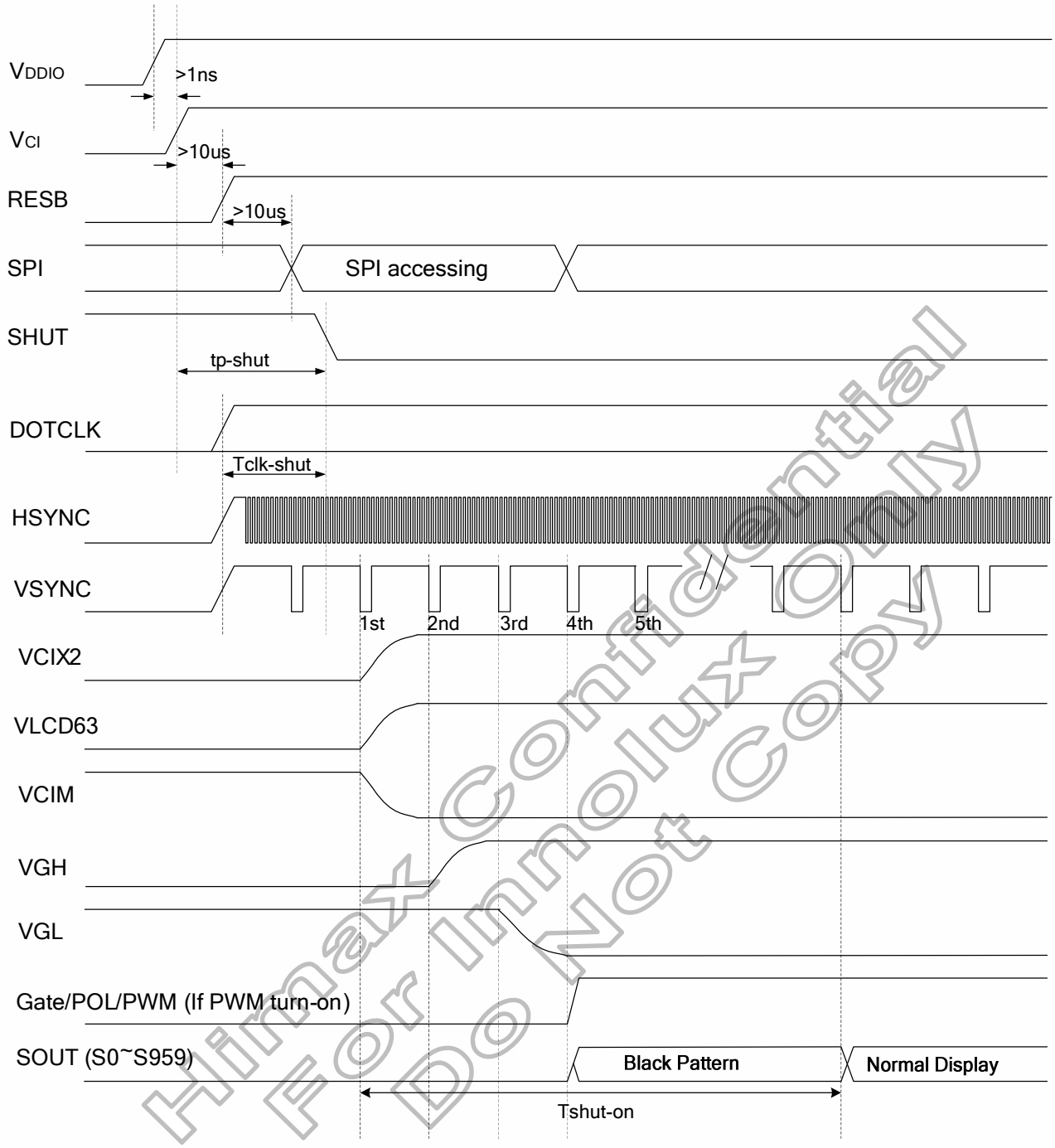

Himax Confidential
For Innolux Only
Do Not Copy

Figure 12. 10 Power Up Sequence

Characteristics	Symbol	Min.	Typ.	Max.	Unit
VDDD / VDDIO on to falling edge of SHUT	tp-shut	1	-	-	us
DOTCLK	tclk-shut	1	-	-	clk
Falling edge of SHUT to display start - 1 line: 408 clk - 1 frame: 262 line -DOTCLK = 6.5MHz	tshut-on	-	-	14	frame
		-	166	232.4	ms

Note: It is necessary to input DOTCLK before the falling edge of SHUT.
Display starts at 10th falling edge of VSTNC after the falling edge of SHUT.

Table 12. 3 Power Up Sequence

This information contained herein is the exclusive property of Himax and shell not be distributed, reproduced, or disclosed in whole or in part without prior written permission of Himax.

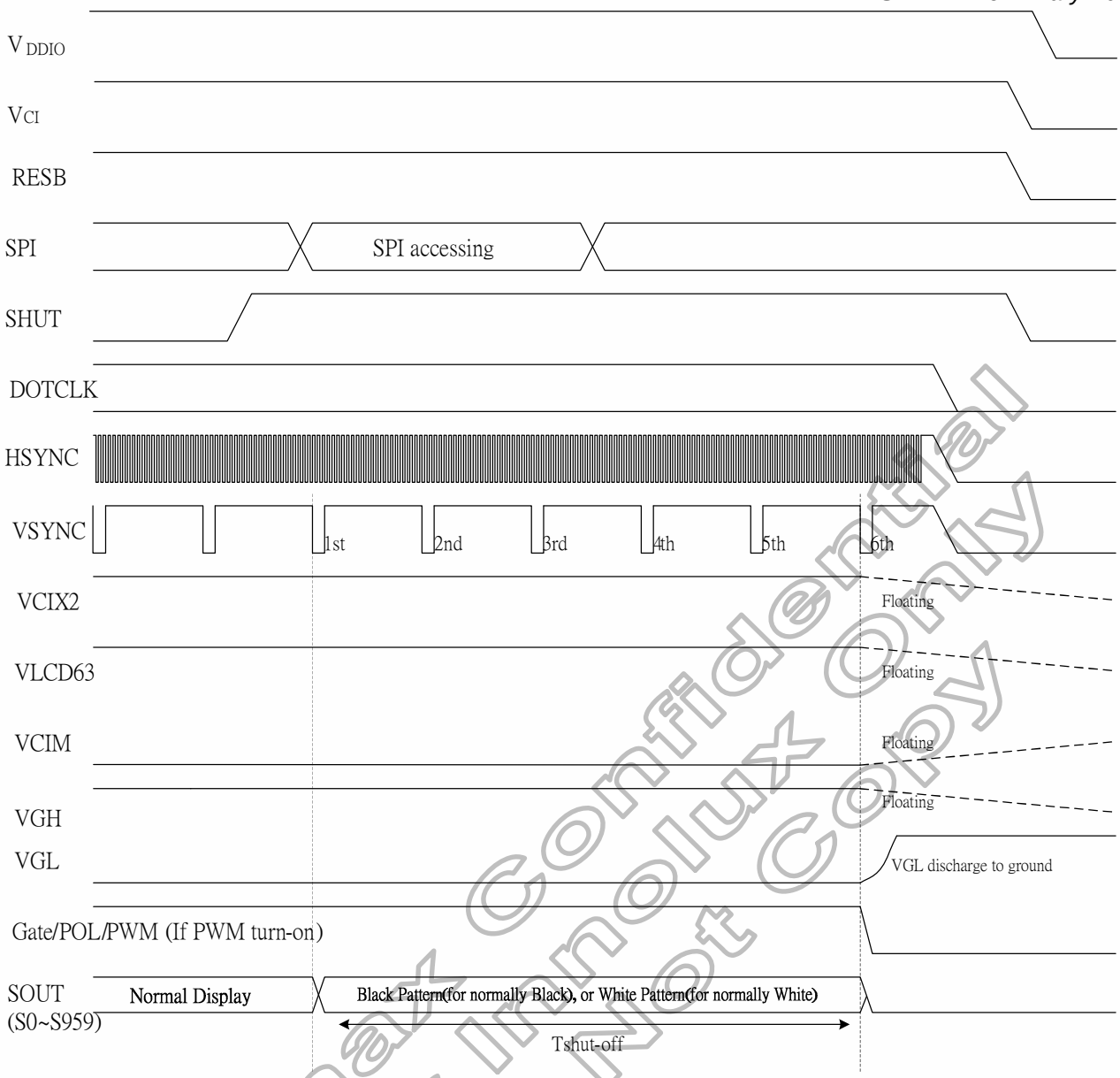

Figure 12. 11 Power Down Sequence

Characteristics	Symbol	Min.	Typ.	Max.	Unit
Rising edge of SHUT to display off - 1 line: 408 clk - 1 frame: 262 line - DOTCLK = 6.5MHz	tshut-off	2	-	-	frame
		33.4	-	-	ms

Note: DOTCLK must be maintained at lease 2 frames after the rising edge of SHUT.
Display become off at the 2nd falling edge of VSTNC after the falling edge of SHUT.
If RESET signal is necessary for power down, provide it after the 2-frames-cycle of the SHUT period.

Table 12. 4 Power Down Sequence

Himax Confidential
For Innolux Only
Do Not Copy

- Write SPI

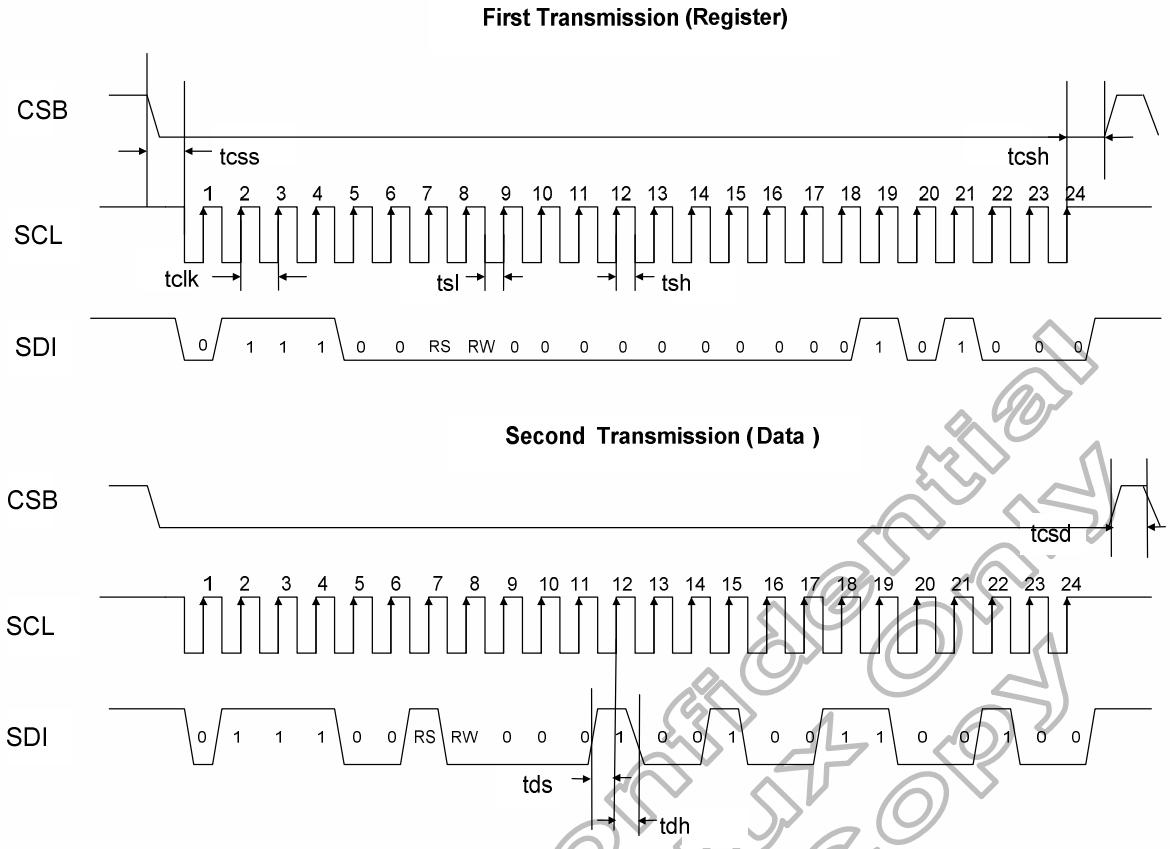

Note: The example writes "0x1264h" to register R28h.
SPID connected to VSS.

Figure 12. 12 (a) SPI interface Timing Diagram & Write SPI Example

Himax Confidential
For Innolux Only
Do Not Copy

- Read SPI

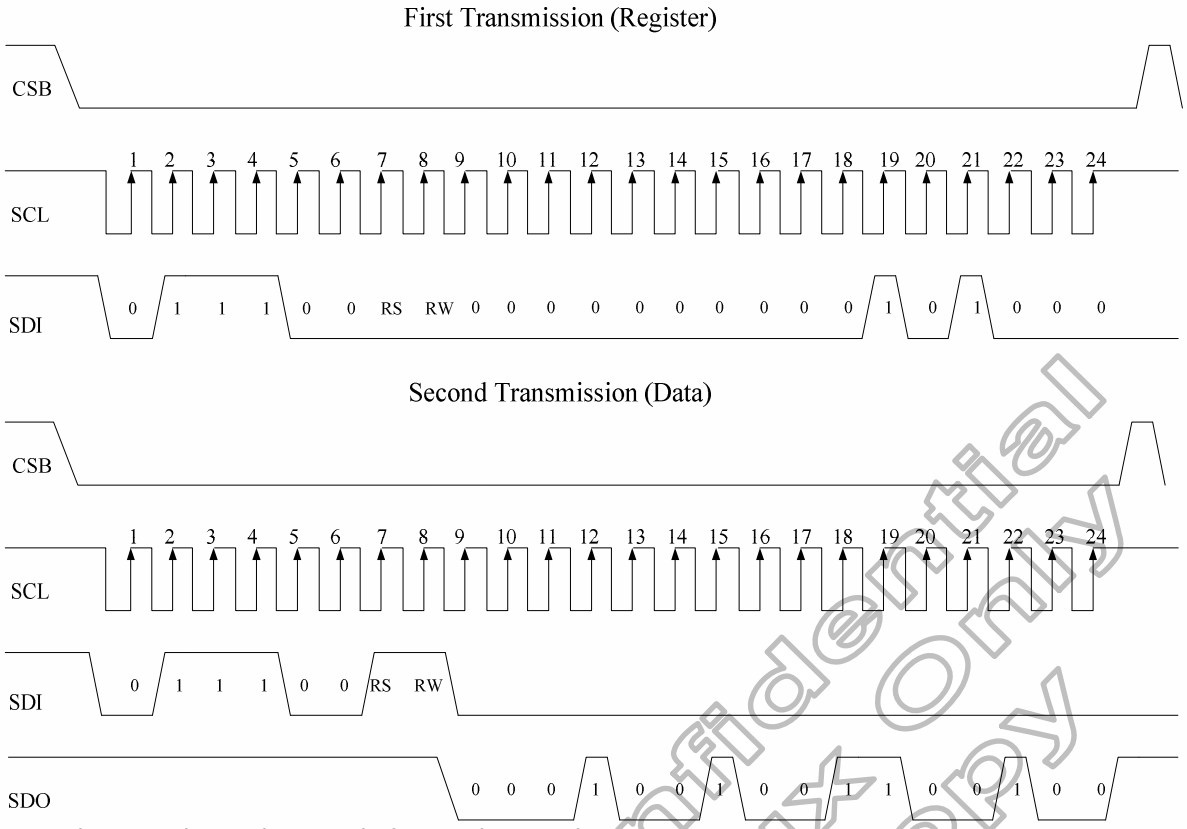

Note: The example Read "0x1264h" from register R28h.

Figure 12. 13 (b) SPI interface Timing Diagram & Read SPI Example

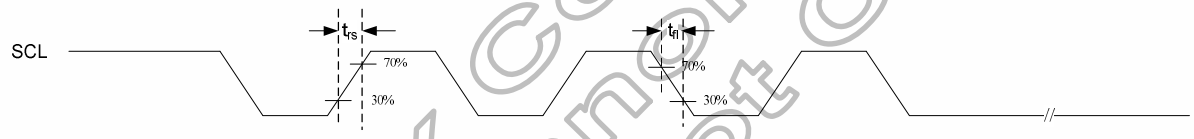

Figure 12. 14 Rising/Falling time

Characteristics	Symbol	Spec.			Unit
		Min.	Typ.	Max.	
Serial Clock Frequency	fclk	-	-	20	MHz
Serial Clock Cycle Time	tclk	50	-	-	ns
Clock Low Width	tsl	25	-	-	ns
Clock High Width	tsh	25	-	-	ns
Clock Rising Time	trs	-	-	30	ns
Clock Falling Time	tfl	-	-	30	ns
Chip Select Hold Time	tcsh	10	-	-	ns
Chip Select High Delay Time	tcsd	20	-	-	ns
Data Setup Time	tds	5	-	-	ns
Data Hold Time	tdh	10	-	-	ns

Table 12. 5 SPI Timing

Himax Confidential
For Innolux Only
Do Not Copy

13. HX8238-D Output Voltage Relationship

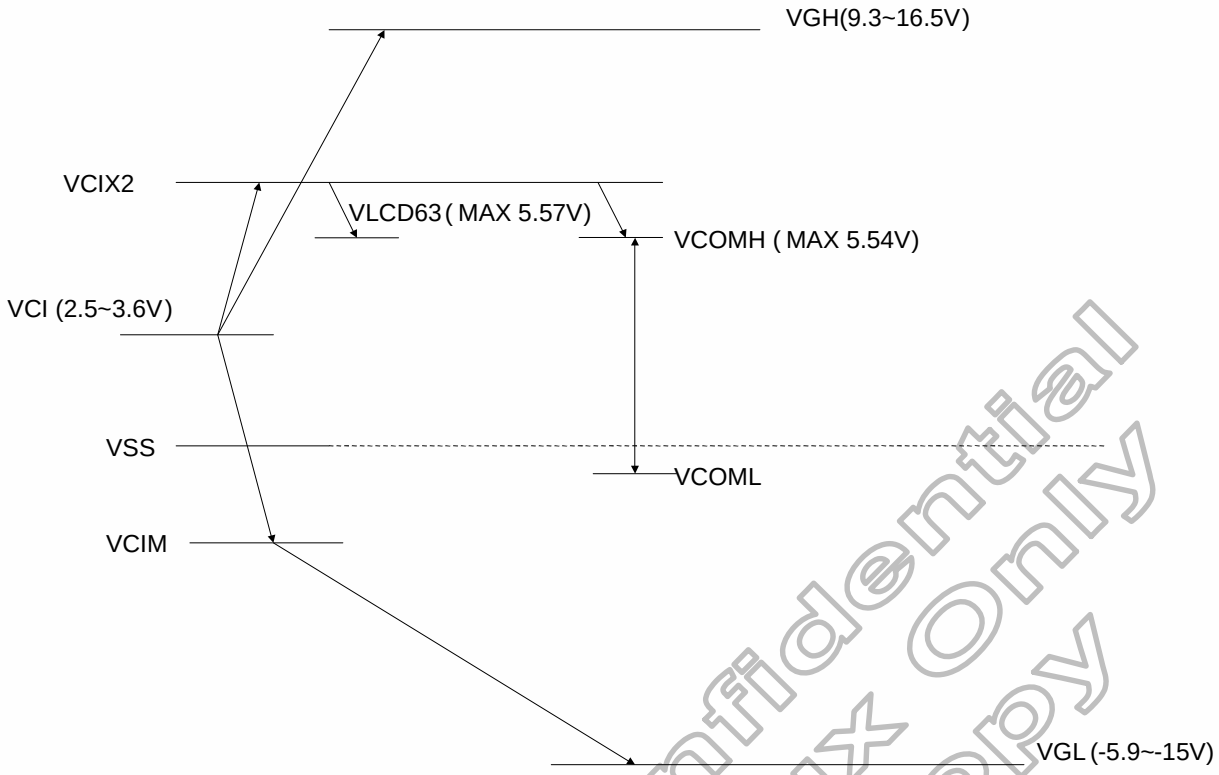

Note: The above voltages level assumed 100% efficiency of the internal booster. There has no voltage drop due to resistance from ITO trace of the panel.

Figure 13. 1 LCD Driving Voltage Relationship

Himax Confidential
For Innolux Only
Do Not Copy

14. Application Circuit

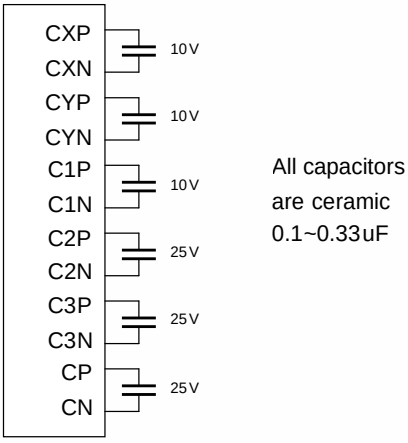

Figure 14. 1 Booster Capacitors

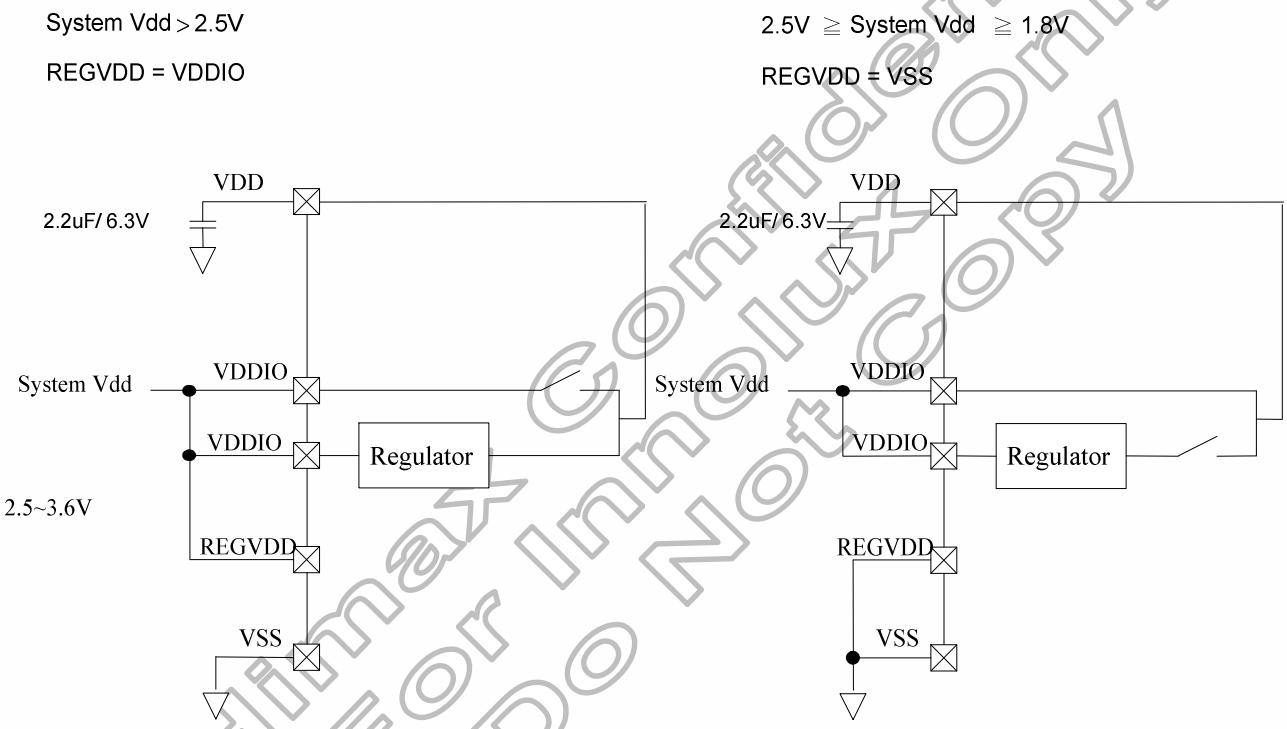

Figure 14. 2 Power Supply Pins Connections

Himax Confidential
For Innolux Only
Do Not Copy

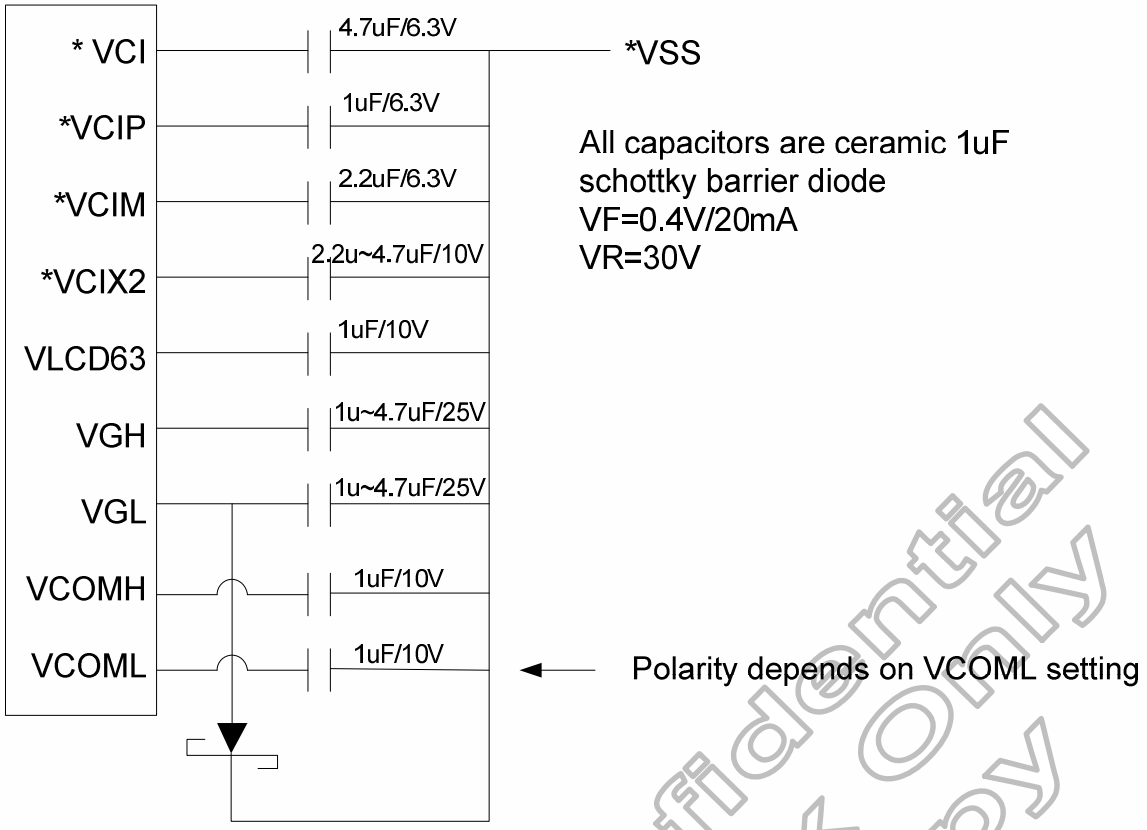

Figure 14. 3 Filtering and Charge Sharing Capacitors

(1) Capacitors on VCI should be 4.7uF.
(2) Capacitors on VCIM should be 2.2uF
(3) Capacitors on VCIX2 should be 2.2~4.7uF
(4) Capacitors on VGH, VGL should be 1~4.7uF
(5) Other capacitors should be 1uF

* VCI should be separate with VCIP at ITO layout to provide noise free path
* VSS, VCHS, AVSS, and VSSRC should be separated at ITO layout to provide noise free path

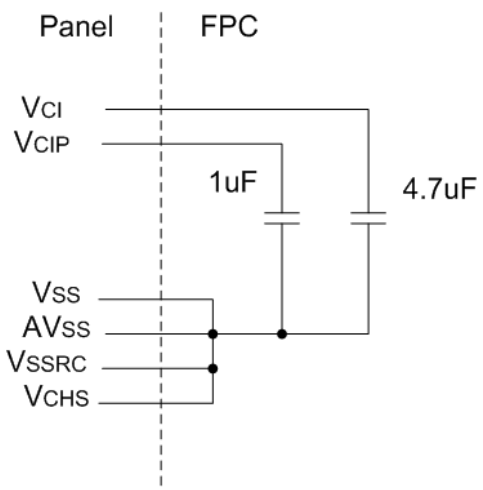

Figure 14. 4 Panel and FPC Connection

Himax Confidential
For Innolux Only
Not Copy

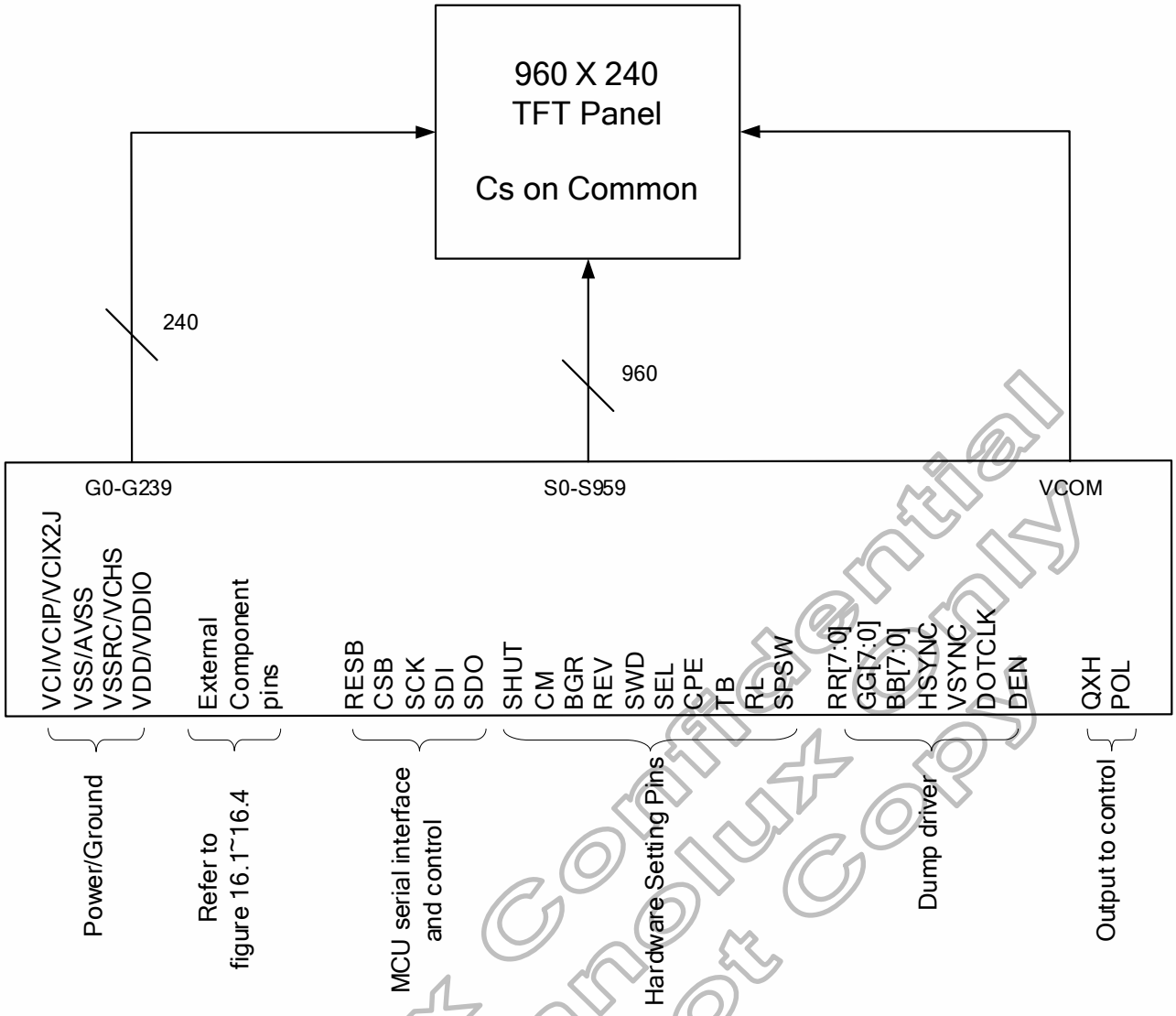

Figure 14. 5 Panel Connection Example

Himax Confidential
For Innolux only
Do Not Copy

15. Revision History

Version	Date	Description of Changes
01	2007/11/08	New setup

Himax Confidential
For Innolux Only
Do Not Copy

With collaboration of https://www.displayfuture.com