REV.	DESCRIPTION	BY	DATE
–	RELEASED	CJL	09/06/05
A	ECO#050412	CJL	10/09/05

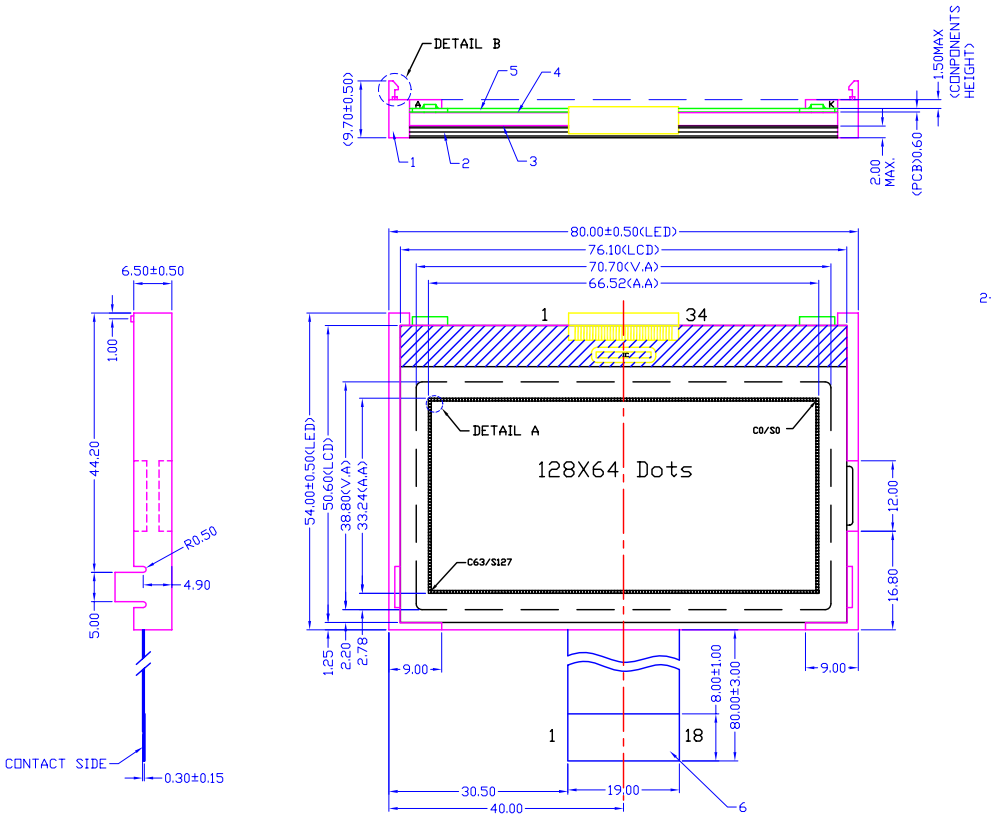

PIN NO.	SIGNAL
1	VSS
2	VDD(+5.0V)
3	V0
4	/RES
5	/CS
6	RS
7	/WR
8	/RD
9	DB0
10	DB1
11	DB2
12	DB3
13	DB4
14	DB5
15	DB6
16	DB7
17	A(+3.8V)
18	K

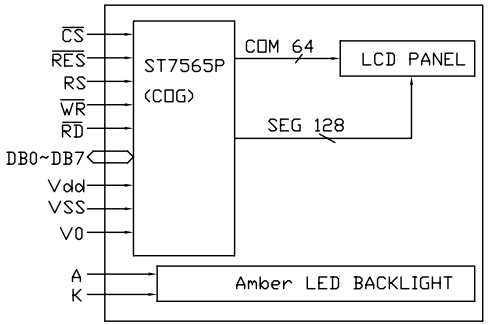

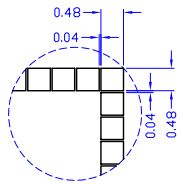

DETAIL A
SCALE 8:1

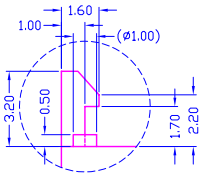

DETAIL B
SCALE 4:1

NOTES:

1. ALL DIMENSIONS ARE mm.
2. DRIVE METHOD: 1/65 DUTY; 1/9 BIAS.
3. CONNECTOR: COG.
4. CONTROLLER IC:ST7565P.
5. 在元件面上的元件焊接后的高度不得超出LED面（1.50MAX.）
6. REFER TO MODULE PRODUCT SPECIFICATIONS FOR SPECIFIC CONFIGURATIONS AND BILL OF MATERIALS

Item	Drawing NO.	Name	QTY.	Spec/Material	Notes
7		DOUBLE SIDE TAPE	1	0.10mm THICK,W2.0XL17	CONNECTED PCB&FFC
6	12864QFFC	FFC TAPE	1	PITCH 1.00mm,18PIN	
5		DOUBLE SIDE TAPE	1	0.10mm THICK	CONNECTED LED&PCB
4	12864QPCB	PCB	1	0.6mm FR4	DOUBLE LAYERS
3		DOUBLE SIDE TAPE	1	0.10mm THICK	CONNECTED LED&LCD
2	12864QLCD-X	LCD DISPLAY	1		COG
1	12864QLED-X	BACKLIGHT LED	1		

TOLERANCE			
>0~6	±0.10	>120~300	±0.50
>6~30	±0.20	>300~500	±0.80
>30~120	±0.30	>500	±1.20
// ⊥ ◎ ±0.10; ANGLE: ±3.0°			

REV: A		
SHEET: 1 OF 1		
SCALE: N.T.S.		UNITS MM
APPROVALS		DATE
DWN	XLN	Oct-27
CHK		
APP		

广州市龙宇电子有限公司
Kingtronics Display Technologies Ltd., Co.

DRAWING NO: 12864QMOD

DO NOT SCALE THIS DRAWING.

PROJECTION

MODEL NUMBER : KG12864Q

DATE: 27-Oct-2005